Advantage Environmental Lighting

XEM7WL

Wet Location LED Exit Sign & Incandescent Combo

STANDARD	OPTIONAL
ETL, WET location, LED	HTR

ILLUMINATION

- *Two fully-adjustable 5.4 watt, glare-free lamp heads.*
- *High-performance reflector and tempered glass lens for optimal light distribution.*
- *Ultra-bright, energy efficient, long-life Red or Green LED exit sign illumination.*

ELECTRICAL

- *Dual 120/277 voltage.*
- *Charge rate/power "ON" LED indicator light and push-to-test switch for mandated code compliance testing.*
- *6V long-life, maintenance-free, rechargeable NiCd battery.*
- *Internal solid-state transfer switch automatically connects the internal battery to LED board/lamp heads for minimum 90-minute emergency illumination.*
- *Fully automatic solid-state, two-rate charger initiates battery charging to recharge a discharged battery in 24 hours.*

MOUNTING

- *Mounting hardware provided for back surface wall mount.*

HOUSING

- *5VA flame retardant, UV-stabilized polycarbonate gray finish.*
- *High-impact resistant, UV-stabilized polycarbonate clear lens.*
- *Corrosion-resistant enclosure engineering grade silicone gasket.*
- *Top and side K/O's provided for conduit feed applications.*
- *EZ snap-out Chevron directional indicators.*

OPTIONS

- *HTR: Optional internal heater for cold temperature applications.*

WARRANTY/LISTING

- *Five year warranty on all electronics and housing. Battery pro-rated for five years.*
- *Meets UL924, NFPA 101 Life Safety Code, NEC, OSHA, Local and State Codes.*

DIMENSIONS

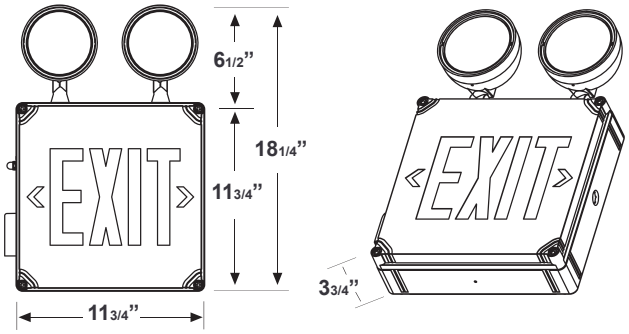

ORDERING INFORMATION

Sample Part Number: ***XEM7WL-1-R-EM***

Special voltage options available.
Check with your AEL Representative.

Model	No. of faces	Letter Color	Battery	Options
XEM7WL	1 Single Face	R Red G Green	EM Battery Backup	HTR Internal Heater

T (817) 468-3591 E info@aelnow.com www.aelnow.com

Specifications subject to change without notice.

Advantage Environmental Lighting

XEM7WL

Wet Location LED Exit Sign & Incandescent Combo

ELECTRICAL INFORMATION

Catalog Number	Input Watts (W)		Input Amps (A)	
	120V	277V	120V	277V
XEM7WL	7.2	7.7	0.063	0.030

CENTER-TO-CENTER SPACING GUIDELINES

Consult factory for details.