XDLVPWL 4.0" x 4.5" Linear Surface Mount Vandal Resistant Wet Location

PROJECT

CATALOG #

TYPE

Features

- Vandal-resistant
- High efficacy and lifespan LEDs
- Surface mount
- Wet location
- Torx head security fasteners

Specifications

Description
The XDLVPWL is a vandal resistant LED linear wet location surface mount fixture. Engineered for high abuse areas

Construction
Constructed of a precision cut, proprietary aluminum extrusion with flat end caps. Vandal-resistant doorframe prevents fixture abuse and seals the fixture. Available in custom RAL finishes.

Door Frame
Thick aluminum doorframe attaches to housing with tamper-proof Torx head with center pin fasteners. Doorframe seals to housing with gaskets to prevent water and dust from entering the fixture.

Mounting
Surface mounting installation. Special mounting bracket available for quick surface installation.

LEDs
High Output 80 CRI LEDs are available in 2700K, 3000K, 3500K, 4000K, and 5000K color temperatures. Integral LEDs are rated for at least 100K life hours (L70). 90 CRI available.

Optics
Vandal-resistant frosted polycarbonate withstands high abuse, while providing optimal light transmission and LED diffusion.

Driver
0-10V dimming driver included standard. Driver options available for 1% dimming, Lutron EcoSystem, and DALI are available.

Finish
Matte white finish standard. Custom finish options are available in various RAL colors.

Listings
UL and cUL listed. RoHS compliant. Suitable for wet locations under covered areas. Manufactured in the USA, BAA compliant.

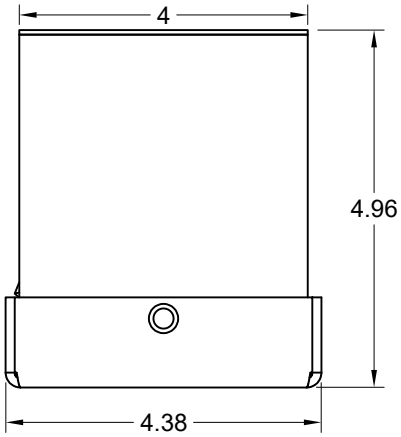

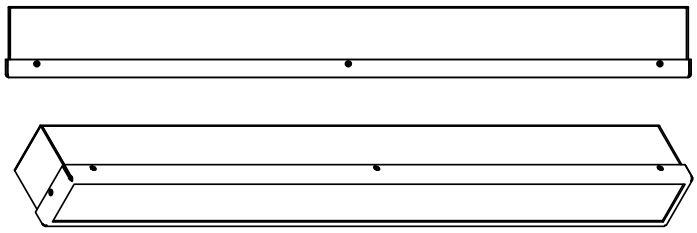

XDLVPWL 4.0" x 4.5" Linear Surface Mount Vandal Resistant Wet Location

ORDERING INFORMATION

Example: XDLVPWL-40-20L-VRFP-M-W-4
With options: XDLVPWL-40-20L-VRFP-M-W-4-SMB

Fixture	CCT	Output	Lens	Voltage	Finish	Length
XDLVPWL	■ **27** *2700K*	■ **S** *4000 Lm*	■ **VRFP** *Vandal Resistant Frosted Polycarbonate*	■ **M** *Multi-Volt (120-277V)*	■ **W** *Matte White*	■ **2** *2 ft*
	■ **30** *3000K*	■ **M** *6000 Lm*			■ **UB** *Urban Bronze*	■ **3** *3 ft*
	■ **35** *3500K*	■ **H** *8000 Lm*			■ **SP** *Special Finish*	■ **4** *4 ft*
	■ **40** *4000K*	■ **VH** *10000 Lm*				■ **5** *5 ft*
	■ **50** *5000K*	■ **XXXXL** *XXXX Lm*				■ **6** *6 ft*
						■ **7** *7 ft*
						■ **8** *8 ft*
						■ **XX** *XX ft*

Options: Add to end of part number

Driver Options	Options	
■ **(BLANK)** *0-10V 10% dimming driver*	■ **14EBL** *14W Emergency Driver*	
■ **CD1** *0-10V 1% dimming driver*	■ **SMB** *Special Surface Mounting Bracket*	
■ **CD5** *0-10V 5% dimming driver*	■ **90** *90 CRI*	
■ **EDN** *Non-dimming electronic driver*	■ **10CWEBL** *10W Cold Weather Emergency Driver*	
■ **DALI** *DALI 1% dimming driver*		
■ **LDE1** *Lutron Hi-Lume 1% EcoSystem LED Driver*		

XDLVPWL 4.0" x 4.5" Linear Surface Mount Vandal Resistant Wet Location

ORDERING INFORMATION

LED Information

Output	S	M	H	VH
Lumens*	4000	6000	8000	10000
System Wattage	25W	37.5W	50W	62.5W
Efficacy (Lm/W)	160	160	160	160
CRI	>82	>82	>82	>82
Dimming	0-10V	0-10V	0-10V	0-10V
Color Consistency	>3 SDCM	>3 SDCM	>3 SDCM	>3 SDCM
Rated Life (L70)	>100,000 hrs	>100,000 hrs	>100,000 hrs	>100,000 hrs

** Lumen output was calculated with 4000K LEDs.*

Lumen Adjustment Factors 80 CRI

CCT	2700K	3000K	3500K	4000K	5000K
Adjustment	93.5%	95.2%	96.8%	100.0%	103.0%

Lumen Adjustment Factors 90 CRI

CCT	2700K	3000K	3500K	4000K	5000K
Adjustment	77.5%	79.2%	80.8%	85.1%	87.3%