ADVANTAGE ENVIRONMENTAL LIGHTING

MADE IN THE USA

CATALOG #:

PROJECT:

TYPE:

XDL4DID

4.0" X 4.5" LINEAR SUSPENDED

The **XDL4DID** is a direct/ indirect suspended LED linear fixture, design with quality craftsmanship. Engineered for quick and easy tool-less installation. The XDL series provides clean lines, smooth continuous runs, and tight lens fitment. Available in continuous runs and custom angles and lengths.

CONSTRUCTION Constructed of a precision cut, proprietary aluminum extrusion with flat end caps. Internal joiner system. Available in any length with a 2' minimum.

TOOL-LESS ENTRY LED Board tray clips in with quick release holders, and held on by tethers. Releasing the clips drops and holds the board tray, allowing quick, tool-less, and easy wiring of the fixture.

MOUNTING Designed for suspension mounting. Adjustable sliding mounting plate on the top of the fixture tightens down with a thumb-turn, allowing for quick and even fixture suspension.

LEDS High Output LEDs are available in 2700K, 3000K, 3500K, 4000K, and 5000K color temperatures. Integral LEDs are rated for at least 100K life hours (L70).

OPTICS Snap-in satin acrylic lens fully diffuses the appearance of the LEDs and provides excellent light transmission.

DRIVER 0-10V dimming driver included standard. Driver options available for 1% dimming, Lutron EcoSystem, and DALI.

FINISH Matte white finish standard. Custom finish options are available in various RAL colors.

OPTIONS Various options are available. If hanging canopies are ordered, one power feed and one nonpower feed per fixture should be ordered. If additional or custom options are needed, consult factory.

WARRANTY: 5-Year Limited Warranty. Complete warranty and terms located at www.aelnow.com/warranty

Ordering Information and Dimensions on Next Page

ADVANTAGE ENVIRONMENTAL LIGHTING

CATALOG #:	
PROJECT:	
TYPE:	

ORDERING INFORMATION
Example: XDL4DID-40-7L-W-4-M-CPX100

SERIES	CCT	OUTPUT	FINISH	HOUSING	DRIVER
XDL4DID	27 2700K	5L 500 lm/ft.	W Matte Finish	2 2 ft	(BLANK) 0-10V 10% dimming driver
	30 3000K	7L 700 lm/ft.	SP Special Finish	3 3 ft.	CD1 0-10V 1% dimming driver
	35 3500K	10L 1000 lm/ft.		4 4 ft.	CD5 0-10V 5% dimming driver
	40 4000K	14L 1400 lm/ft.		5 5 ft.	EDN Non-dimming electronic driver
	50 5000K	XXXL Custom lm/ft.		6 6 ft.	LDE1 Lutron Hi-Lume 1% EcoSystem LED Driver
				7 7ft.	
				8 8 ft.	
				XX Custom fit.	

VOLTAGE	OPTIONS	
M Multi-Volt (120-277VAC)	14EBL	14 Watt Lumen Emergency Ballast
	90	90 CRI
	90D	90 Degree Turn
	90V	90 Degree Ceiling-to-Wall
	XXD	XX Degree turn (90 to 60 degrees)
	CPX100*	Cord Pendant (No Power Feed) 8.25ft.
	CPFX100-5W	5-Wire Cord Pendant (Power Feed) 8.25ft.

Pendant mount illustrations shown on page 3

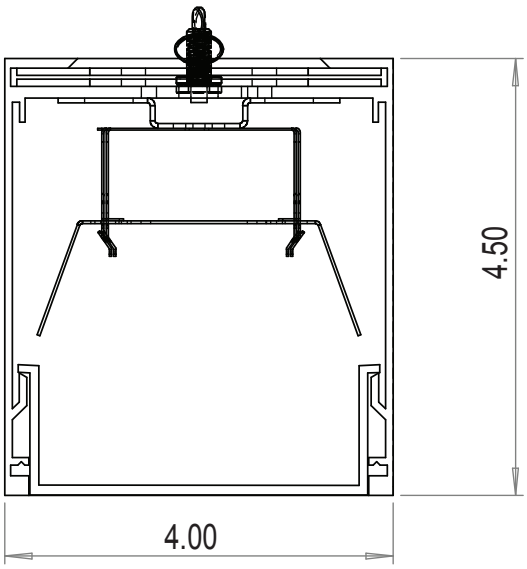

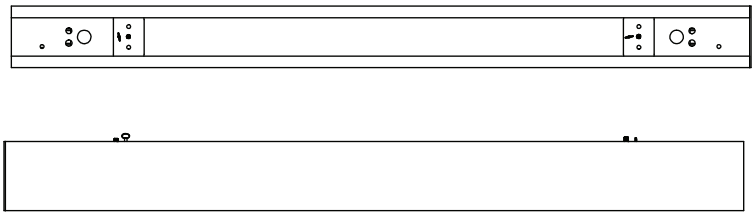

ADVANTAGE ENVIRONMENTAL LIGHTING

CATALOG #:

PROJECT:

TYPE:

SPECIFICATIONS

LED Information

Output	5L	7L	10L	14L
Lumens/Ft*	500	700	1000	1400
System Wattage/Ft	3.125W	4.375W	6.25W	8.75W
Efficacy (Lm/W)	160	160	160	160
CRI	>82	>82	>82	>82
Dimming	0-10V	0-10V	0-10V	0-10V
Color Consistency	>3 SDCM	>3 SDCM	>3 SDCM	>3 SDCM
Rated Life (L70)	>100,000 hrs	>100,000 hrs	>100,000 hrs	>100,000 hrs

** Lumen output was calculated with 4000K LEDs.*

Lumen Adjustment Factors 80 CRI

CCT	2700K	3000K	3500K	4000K	5000K
Adjustment	93.5%	95.2%	96.8%	100.0%	103.0%

Lumen Adjustment Factors 90 CRI

CCT	2700K	3000K	3500K	4000K	5000K
Adjustment	77.5%	79.2%	80.8%	85.1%	87.3%

Innovative Features

- Light trap prevents light leaks

- Board tray quick-release holders

- Board tray connected with tethers

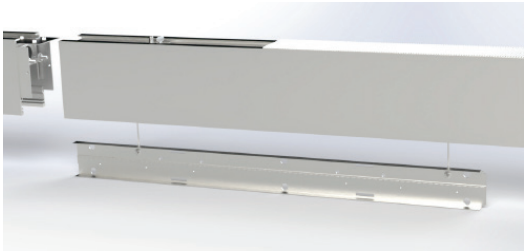

ADVANTAGE ENVIRONMENTAL LIGHTING

CATALOG #:

PROJECT:

TYPE:

POWER FEED

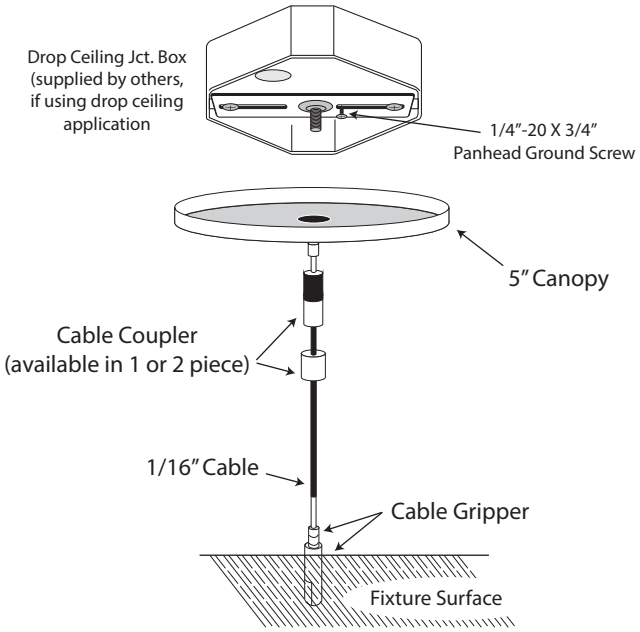

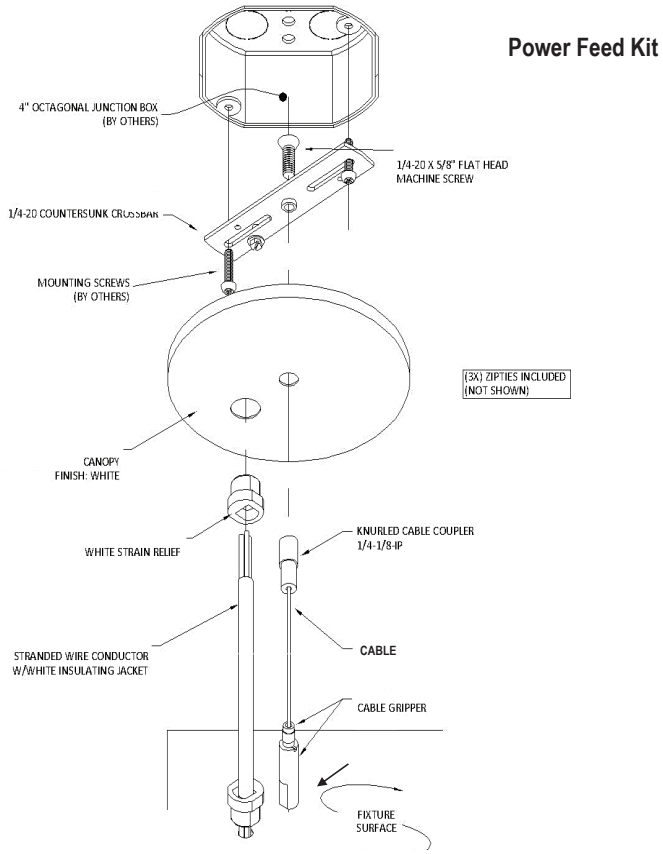

NON-FEED SYSTEM

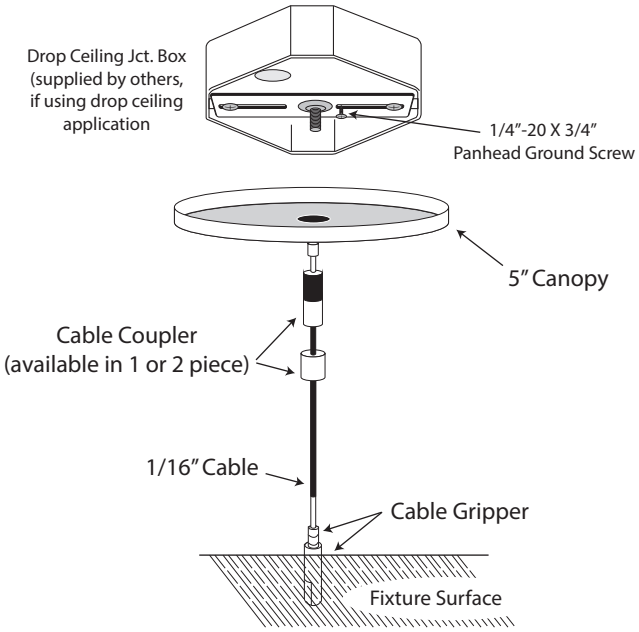

PHOTOMETRICS

File Name: XDL4WM-40-5L-M-W-4.IES
XDL4WM 4.0" X 4.5" LED Wall Mount 5L Output

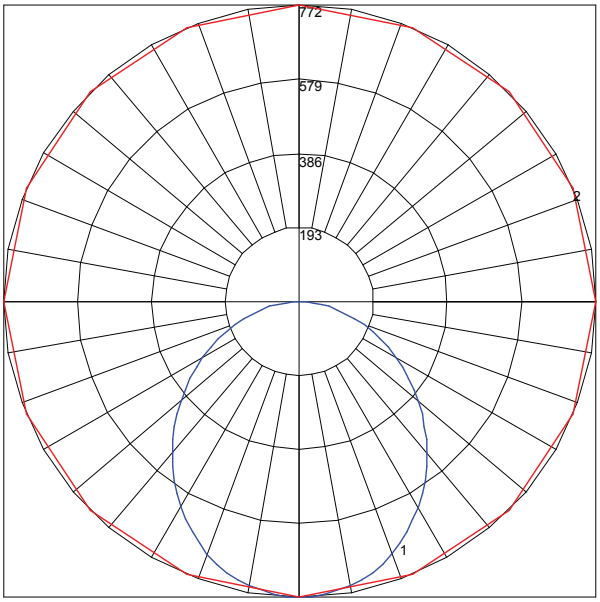

File Name: XDL4WM-40-7L-M-W-4.IES
XDL4WM 4.0" X 4.5" LED Wall Mount 7L Output

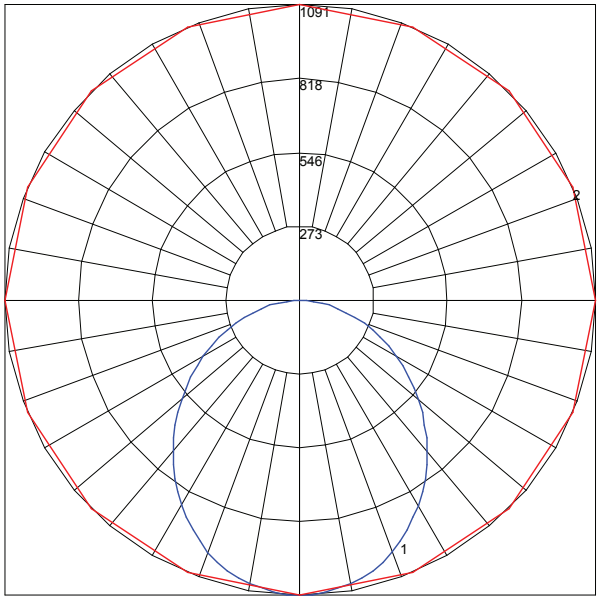

File Name: XDL4WM-40-10L-M-W-4.IES
XDL4WM 4.0" X 4.5" LED Wall Mount 10L Output

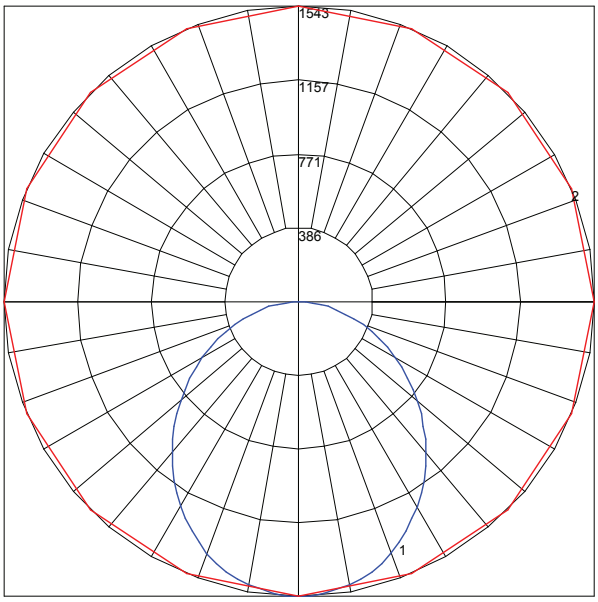
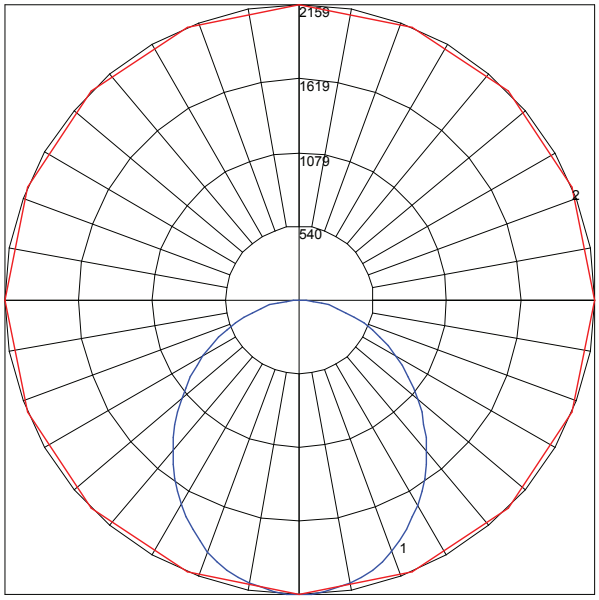
File Name: XDL4WM-40-14L-M-W-4.IES
XDL4WM 4.0" X 4.5" LED Wall Mount 14L Output