ADVANTAGE ENVIRONMENTAL LIGHTING

MADE IN THE USA

CATALOG #:

PROJECT:

TYPE:

XDL 24WM-MRI

2.5" X 4.5" LINEAR WALL MOUNT

DESCRIPTION: The **XDL24WM-MRI** is an LED linear wall mount fixture, aluminum body, recessed LED linear fixture designed for MRI and Imaging suites. Engineered for quick and easy tool-less installation. The XDL24WM-MRI provides clean lines, smooth continuous runs, and tight lens fitment. Available in continuous runs and custom angles and lengths.

CONSTRUCTION: Constructed of a precision cut, proprietary aluminum extrusion with flat end caps. Internal joiner system. Available in any length with a 2' minimum.

TOOL-LESS ENTRY: LED board tray clips in with quick release holders, and held on by tethers. Releasing the clips drops and holds the board tray, allowing quick, tool-less, and easy wiring of the fixture.

MOUNTING: 2 piece wall innovative wall mounting system allows for quick and easy mounting.

REMOTE MOUNT POWER SUPPLY: Remote mounted power supply ordered as separate line item. 0-10v dimming standard. EMI Filter required (supplied by others unless specified).

LEDS: High Output LEDs are available in 2700K, 3000K, 3500K, 4000K, and 5000K color temperatures. Integral LEDs are rated for at least 100K life hours (L70).

OPTICS: Snap-in satin acrylic lens fully diffuses the appearance of the LEDs and provides excellent light transmission.

DRIVER: 0-10V dimming driver included standard. Driver options available for 1% dimming, Lutron EcoSystem, and DALI.

FINISH: Matte white finish standard. Custom finish options are available in various RAL colors.

OPTIONS: Various options are available. If hanging canopies are ordered, one power feed and one nonpower feed per fixture should be ordered. If additional or custom options are needed, consult factory.

WARRANTY: 5-Year Limited Warranty. Complete warranty and terms located at **www.aelnow.com/warranty**.

ORDERING INFORMATION. Example: XDL24WM-MRI-35-7L-M-W-4-CD1

SERIES	CCT		OUTPUT		VOLTAGE		FINISH		LENGTH		DRIVER OPTIONS		OPTIONS	
XDL24WM-MRI	27	2700K	5L	500 lm/ft	M	Multi-Volt (120-277V)	W	Matte White	2	2 ft.	(BLANK)	0-10V 10% dimming driver	14EBL	14 Watt Emergency Ballast
	30	3000K	7L	700 lm/ft			SP	Special Finish	3	3 ft.	CD1	0-10V 1% dimming driver	OC4EX	Occupancy Sensor
	35	3500K	10L	1000 lm/ft					4	4 ft.	CD5	0-10V 5% dimming driver	AM	Anti-Microbial White Paint
	40	4000K	14L	1400 lm/ft					5	5 ft.	EDN	Non-dimming electronic driver	90	90 CRI
	50	5000K	XXXL	XXX lm/ft					6	6 ft.	DALI	DALI 1% dimming driver	SS	Stainless Steel Screws
									7	7 ft.	LDE1	Lutron Hi-Lume 1% EcoSystem LED Driver		
									8	8 ft.	RPB6	Remote Driver Enclosure (Specifications shown on last page), Fits up to 6 drivers		
									XX	XX ft.	RPB9	Remote Driver Enclosure (Specifications shown on last page), Fits up to 9 drivers		

ADVANTAGE ENVIRONMENTAL LIGHTING

CATALOG #:	
PROJECT:	
TYPE:	

DIMENSIONS

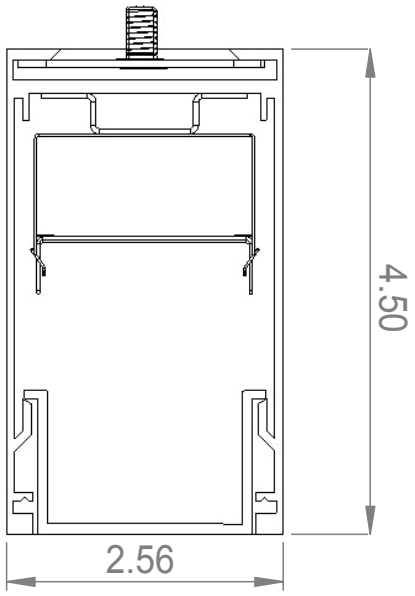

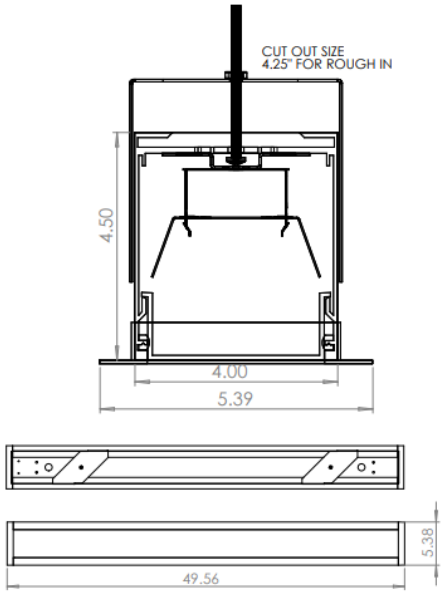

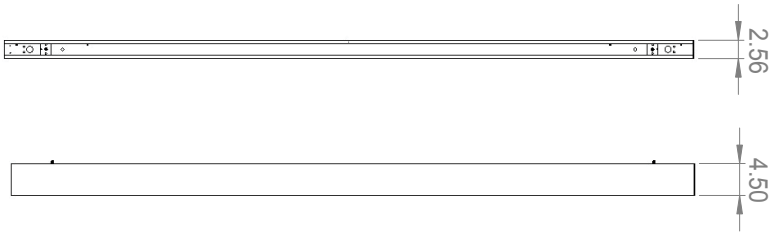

LED Information

Output	5L	7L	10L	14L
Lumens/Ft*	500	700	1000	1400
System Wattage/Ft	3.125W	4.375W	6.25W	8.75W
Efficacy (Lm/W)	160	160	160	160
CRI	>82	>82	>82	>82
Dimming	0-10V	0-10V	0-10V	0-10V
Color Consistency	>3 SDCM	>3 SDCM	>3 SDCM	>3 SDCM
Rated Life (L70)	>100,000 hrs	>100,000 hrs	>100,000 hrs	>100,000 hrs

** Lumen output was calculated with 4000K LEDs.*

ADVANTAGE ENVIRONMENTAL LIGHTING

CATALOG #:	
PROJECT:	
TYPE:	

RPB6 (UP TO 6 DRIVERS)
RPB9 (UP TO 9 DRIVERS)
REMOTE POWER BOX

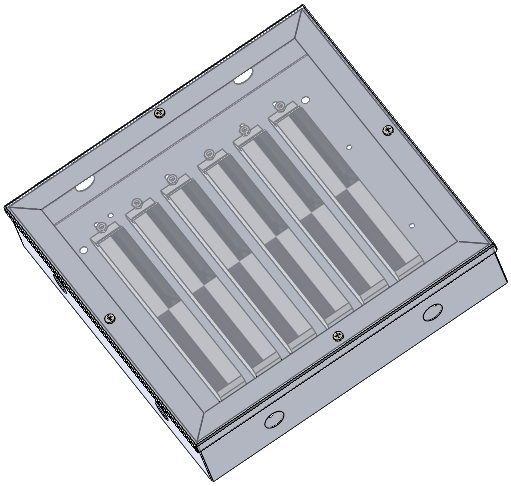

Electronic remote power supply provides power from outside the shielded MRI room, within the remote power supply enclosure.

MOUNTING INSTRUCTIONS

1. Mount the remote mounted power supply outside the MRI room.
2. Each driver will have an individual quick-connect for ease of wiring.
3. Ensure that all power/dimming wiring is completely shielded in grounded conduit. Use a minimum of 18 AWG low voltage supply wire.
4. Connect wiring to the driver and run to the installed fixtures. Connect hot and neutral wires to the light fixtures quick connects.
5. Installation is complete.

Ordering Information

SERIES		# OF FIXTURES PER DRIVER		# OF DRIVERS		OPTIONS	
RPB6	Fits up to 6 drivers	1	1 Fixture per Driver	D1	1 LED 1% Dimming Drivers	AM	Anti-Microbial White Paint
RPB9	Fits up to 9 drivers	2	2 Fixtures per Driver	D2	2 LED 1% Dimming Drivers		
		3	3 Fixtures per Driver	D3	3 LED 1% Dimming Drivers		
		4	4 Fixtures per Driver	D4	4 LED 1% Dimming Drivers		
		X	X Fixtures per Driver	D5	5 LED 1% Dimming Drivers		
				D6	6 LED 1% Dimming Drivers		
				D7	7 LED 1% Dimming Drivers		
				D8	8 LED 1% Dimming Drivers		
				D9	9 LED 1% Dimming Drivers		