Advantage. Environmental Lighting

XDL24RWL 2.5" x 4.5" Linear Recessed Wet Location

PROJECT

CATALOG #

TYPE

Highlights

- Tool-Less Entry
- High efficacy and lifespan LEDs
- Recessed, Flanged, and Flangeless Trim mounting
- Wet Location Rated

Description
The XDL24RWL is a recessed wet location LED linear fixture, design with quality craftsmanship. Engineered for quick and easy tool-less installation. The XDL series provides clean lines, smooth continuous runs, and tight lens fitment. Available in continuous runs and custom angles and lengths.

Construction
Constructed of a precision cut, proprietary aluminum extrusion with flat end caps. Internal joiner system. Available in any length with a 2' minimum. Custom gaskets seal the fixture to make a wet location rated linear fixture.

Tool-less Entry
LED Board tray clips in with quick release holders, and held on by tethers. Releasing the clips drops and holds the board tray, allowing quick, tool-less, and easy wiring of the fixture.

Mounting
Lay-in grid fixtures fit 9/16 and 15/16 standard T-grids. Flanged mounting and flangeless trim mounting options include innovative top mount bracket to support the fixture.

LEDs
High Output LEDs are available in 2700K, 3000K, 3500K, 4000K, and 5000K color temperatures. Integral LEDs are rated for at least 100K life hours (L70).

Optics
Snap-in satin acrylic lens fully diffuses the appearance of the LEDs and provides excellent light transmission.

Driver
0-10V dimming driver included standard. Driver options available for 1% dimming, Lutron EcoSystem, and DALI.

Finish
Matte white finish standard. Custom finish options are available in various RAL colors.

Options
Various options are available. If additional or custom options are needed, consult factory.

Listings
ETL and cETL listed. RoHS compliant. Suitable for wet locations.

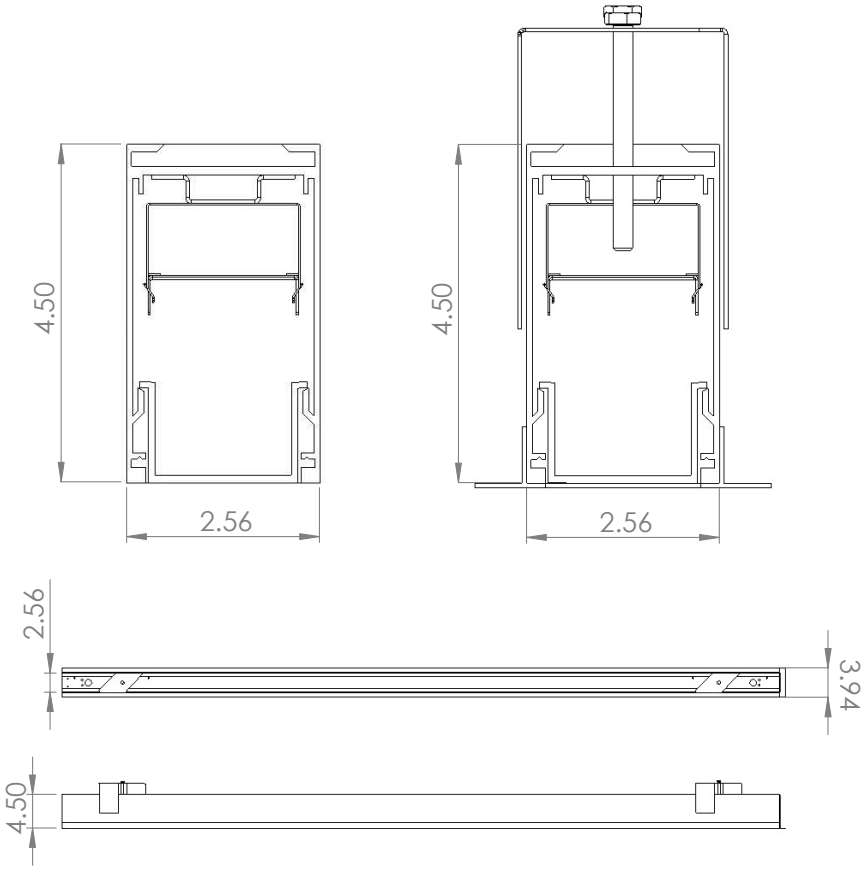

5 YEAR WARRANTY

XDL24RWL 2.5" x 4.5" Linear Recessed Wet Location

ORDERING INFORMATION

Example: XDL24RWL-L-40-10L-M-W-4
With options: XDL24RWL-L-40-10L-M-W-4-12EBL

Fixture	Mounting	CCT	Output	Voltage	Finish	Length
XDL24RWL	■ **L** *Lay-in Grid*	■ **27** *2700K*	■ **5L** *500 Lm/Ft*	■ **M** *Multi-Volt (120-277V)*	■ **W** *Matte White*	■ **2** *2 ft*
	■ **F** *Flanged*	■ **30** *3000K*	■ **7L** *700 Lm/Ft*		■ **SP** *Special Finish*	■ **3** *3 ft*
	■ **FT** *Flangeless Trim*	■ **35** *3500K*	■ **10L** *1000 Lm/Ft*			■ **4** *4 ft*
		■ **40** *4000K*	■ **14L** *1400 Lm/Ft*			■ **5** *5 ft*
		■ **50** *5000K*	■ **XXXXL** *XXXX Lm/Ft*			■ **6** *6 ft*
						■ **7** *7 ft*
						■ **8** *8 ft*
						■ **XX** *XX ft*

For special runs, such as wall-to-ceiling, 90 degree or custom angle turns, add desired length after the option.
eg: XDL24RWL-FT-40-10L-M-W-14-90D-13 for 14 foot to 90 degree turn to 13 foot.

Options: Add to end of part number

Driver Options	Options	
■ **(BLANK)** *0-10V 10% dimming driver*	■ **14EBL** *14 Watt Emergency Ballast*	
■ **CD1** *0-10V 1% dimming driver*	■ **EC** *Emergency Circuit*	
■ **CD5** *0-10V 5% dimming driver*	■ **90** *90 CRI*	
■ **EDN** *Non-dimming electronic driver*	■ **90D** *90 Degree Turn*	
■ **DALI** *DALI 1% dimming driver*	■ **90V** *90 Degree Ceiling-to-Wall*	
■ **LDE1** *Lutron Hi-Lume 1% EcoSystem LED Driver*	■ **XXD** *XX Degree turn (90 to 60 degrees)*	

XDL24RWL 2.5" x 4.5" Linear Recessed Wet Location

SPECIFICATIONS

LED Information

Output	5L	7L	10L	14L
Lumens/Ft*	500	700	1000	1400
System Wattage/Ft	3.125W	4.375W	6.25W	8.75W
Efficacy (Lm/W)	160	160	160	160
CRI	>82	>82	>82	>82
Dimming	0-10V	0-10V	0-10V	0-10V
Color Consistency	>3 SDCM	>3 SDCM	>3 SDCM	>3 SDCM
Rated Life (L70)	>100,000 hrs	>100,000 hrs	>100,000 hrs	>100,000 hrs

** Lumen output was calculated with 4000K LEDs.*

Lumen Adjustment Factors 80 CRI

CCT	2700K	3000K	3500K	4000K	5000K
Adjustment	93.5%	95.2%	96.8%	100.0%	103.0%

Lumen Adjustment Factors 90 CRI

CCT	2700K	3000K	3500K	4000K	5000K
Adjustment	77.5%	79.2%	80.8%	85.1%	87.3%

Innovative Features

- Light trap prevents light leaks

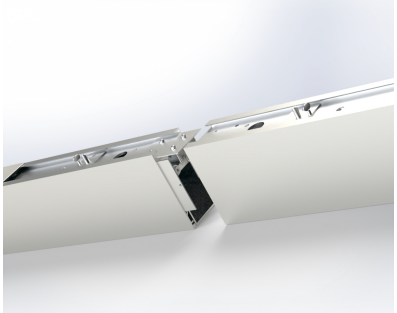

- Board tray quick-release holders

- Board tray connected with tethers

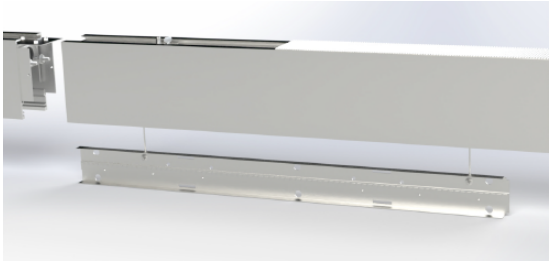

XDL24RWL 2.5" x 4.5" Linear Recessed Wet Location

PHOTOMETRICS

File Name: XDL24RWL-X-40-5L-M-W-4.IES
XDL24RWL 2.5" X 4.5" LED Recessed 5L Output

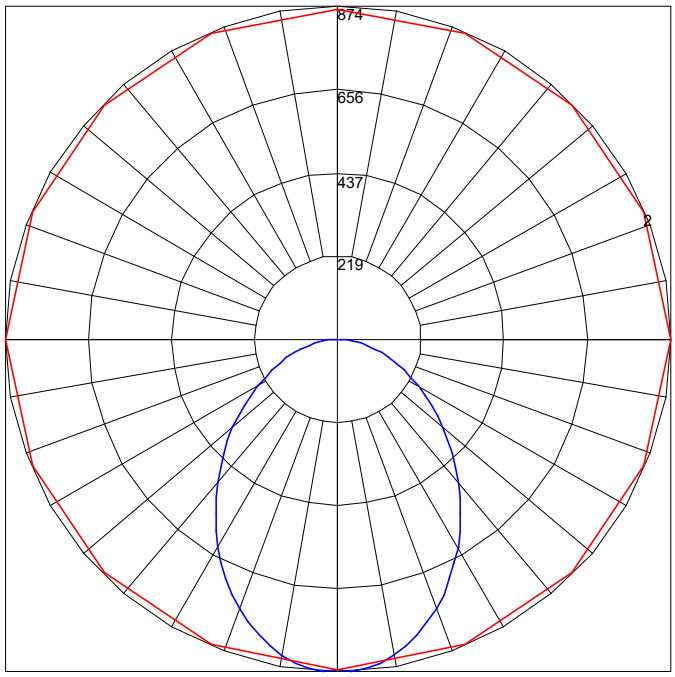

File Name: XDL24RWL-X-40-7L-M-W-4.IES
XDL24RWL 2.5" X 4.5" LED Recessed 7L Output

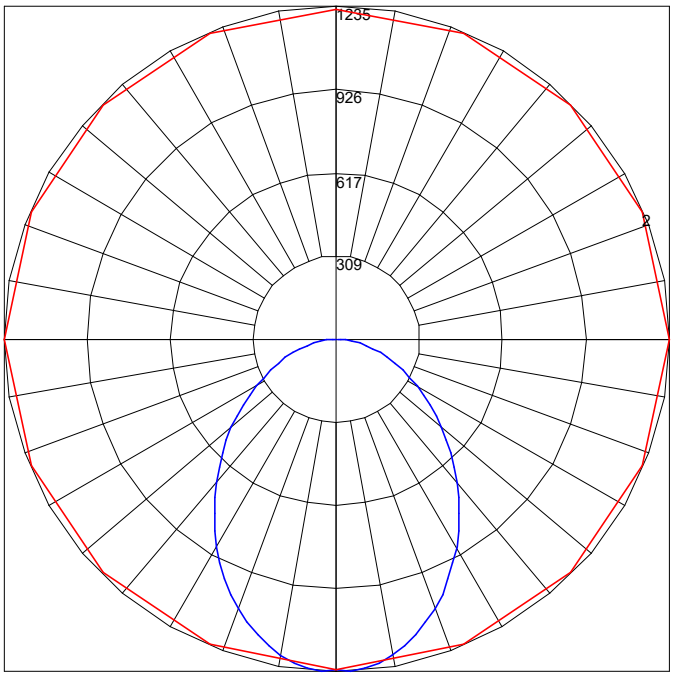

File Name: XDL24RWL-X-40-10L-M-W-4.IES
XDL24RWL 2.5" X 4.5" LED Recessed 10L Output

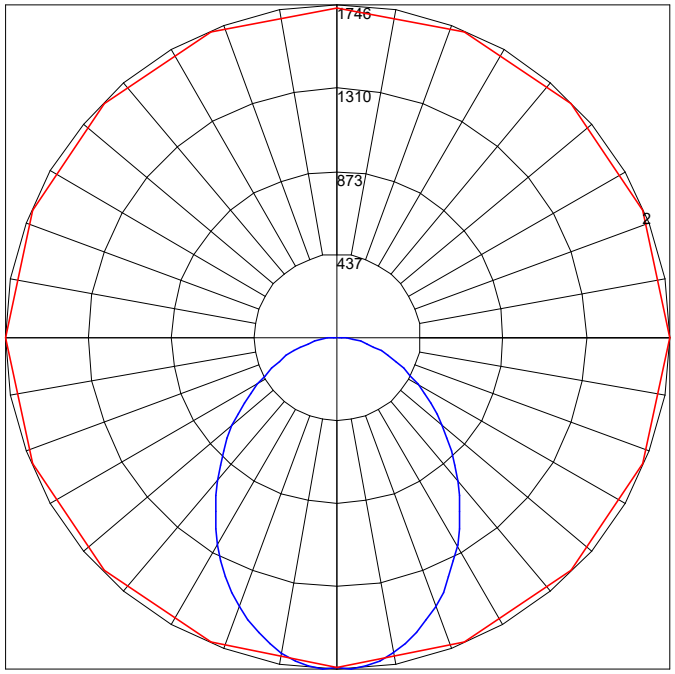
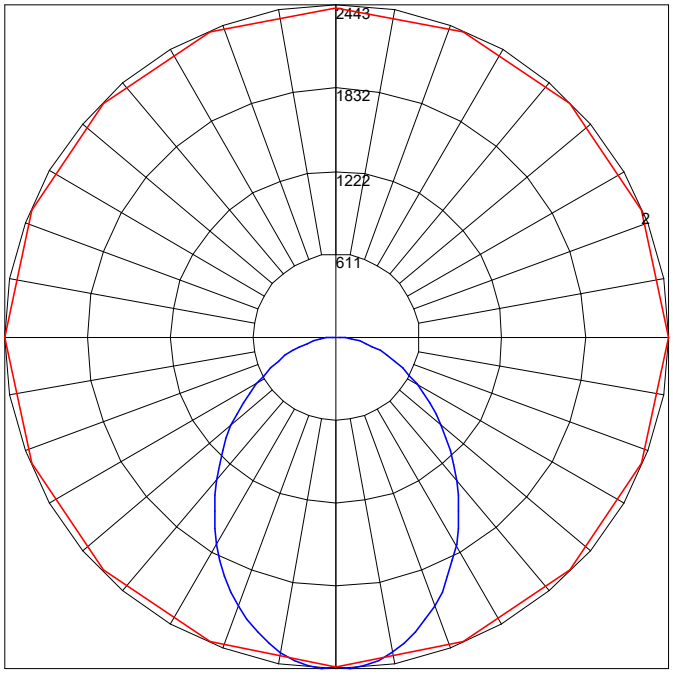
File Name: XDL24RWL-X-40-14L-M-W-4.IES
XDL24RWL 2.5" X 4.5" LED Recessed 14L Output