ADVANTAGE ENVIRONMENTAL LIGHTING

MADE IN THE USA

CATALOG #:	
PROJECT:	
TYPE:	

XDL24RCW

RECESSED CEILING TO WALL DESIGNER LUMINAIRE

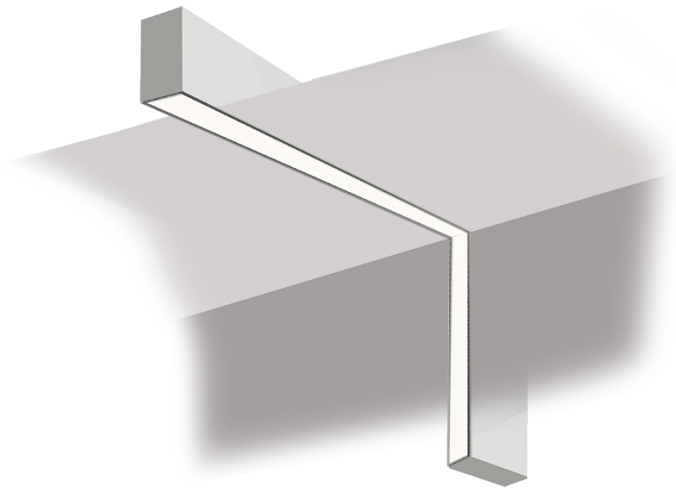

DESCRIPTION: The XDL24RCW is a celing-to-wall LED linear fixture, designed with quality craftsmanship. Engineered for quick and easy tool-less installation. The XDL24RCW series provides clean lines, smooth continuous runs, and tight lens fitment. Available in variable lengths. With the available option of anti-microbial finish for a cleanroom application.

CONSTRUCTION: Constructed of a precision cut, proprietary steel extrusion with flat end caps. Internal joiner system. Available in any length with a 2' minimum.

TOOL-LESS ENTRY: LED Board tray clips in with quick release holders, and held on by tethers. Releasing the clips drops and holds the board tray, allowing quick, tool-less, and easy wiring of the fixture.

MOUNTING: Lay-in grid fixtures fit 9/16 and 15/16 standard T-grids. Flanged mounting and flangeless trim mounting options include innovative top mount bracket to support the fixture.

LEDS: High Output LEDs are available in 2700K, 3000K, 3500K, 4000K, and 5000K color temperatures. Integral LEDs are rated for at least 100K life hours (L70).

OPTICS: Snap-in satin acrylic lens fully diffuses the appearance of the LEDs and provides excellent light transmission.

DRIVER: 0-10V dimming driver included standard. Driver options available for 1% dimming, Lutron EcoSystem, and DALI.

FINISH: Matte white finish standard. Custom finish options are available in various RAL colors.

OPTIONS: Various options are available. If hanging canopies are ordered, one power feed and one non-power feed per fixture should be ordered. If additional or custom options are needed, consult factory.

LISTINGS: ISO4 Rated. NSF Listed. Food Safe. IP65 ratings.

WARRANTY: 5-Year Limited Warranty. Complete warranty and terms located at **www.aelnow.com/warranty**.

Ordering Information on Next Page ►

ADVANTAGE ENVIRONMENTAL LIGHTING

CATALOG #:

PROJECT:

TYPE:

ORDERING INFORMATION. Example: XDL24RCW-35-7L-F-M-W-4-DALI

SERIES	LINEAR		CCT		OUTPUT		MOUNTING		VOLTAGE		FINISH		APPLICATION	
XDL24RCW	2	2 ft.	30	3000K	5L	500 lm/ft	L	Lay-in Grid	M	Multi-Volt (120-277V)	W	Matte White	XX FTW	Length in Feet (Wall)
	3	3 ft.	35	3500K	7L	700 lm/ft	F	Flanged			SP	Special Finish	XX FTC	Length in Feet (Ceiling)
	4	4 ft.	40	4000K	10L	1000 lm/ft	FT	Flangeless Trim (Compatible with GYP ceiling)						
	5	5 ft.	50	5000K	14L	1400 lm/ft								
	6	6 ft.			XXXL	XXX lm/ft								
	7	7 ft.												
	8	8 ft.												
	XX	XX ft.												

A 1'x1' "L" section is used as a joiner, so take that dimension into account when ordering.

OPTIONS

14EBL	14 Watt Emergency Ballast
EC	Emergency Circuit
90	90 CRI
L	90 Degree Ceiling-to-Wall
XXV	XX Degree Ceiling-to-Wall
AM	Anti-Microbial White Paint

Dimensions on Next Page

LED Information

Output	5L	7L	10L	14L
Lumens/Ft*	500	700	1000	1400
System Wattage/Ft	3.125W	4.375W	6.25W	8.75W
Efficacy (Lm/W)	160	160	160	160
CRI	>82	>82	>82	>82
Dimming	0-10V	0-10V	0-10V	0-10V
Color Consistency	>3 SDCM	>3 SDCM	>3 SDCM	>3 SDCM
Rated Life (L70)	>100,000 hrs	>100,000 hrs	>100,000 hrs	>100,000 hrs

** Lumen output was calculated with 4000K LEDs.*

ADVANTAGE ENVIRONMENTAL LIGHTING

CATALOG #:	
PROJECT:	
TYPE:	
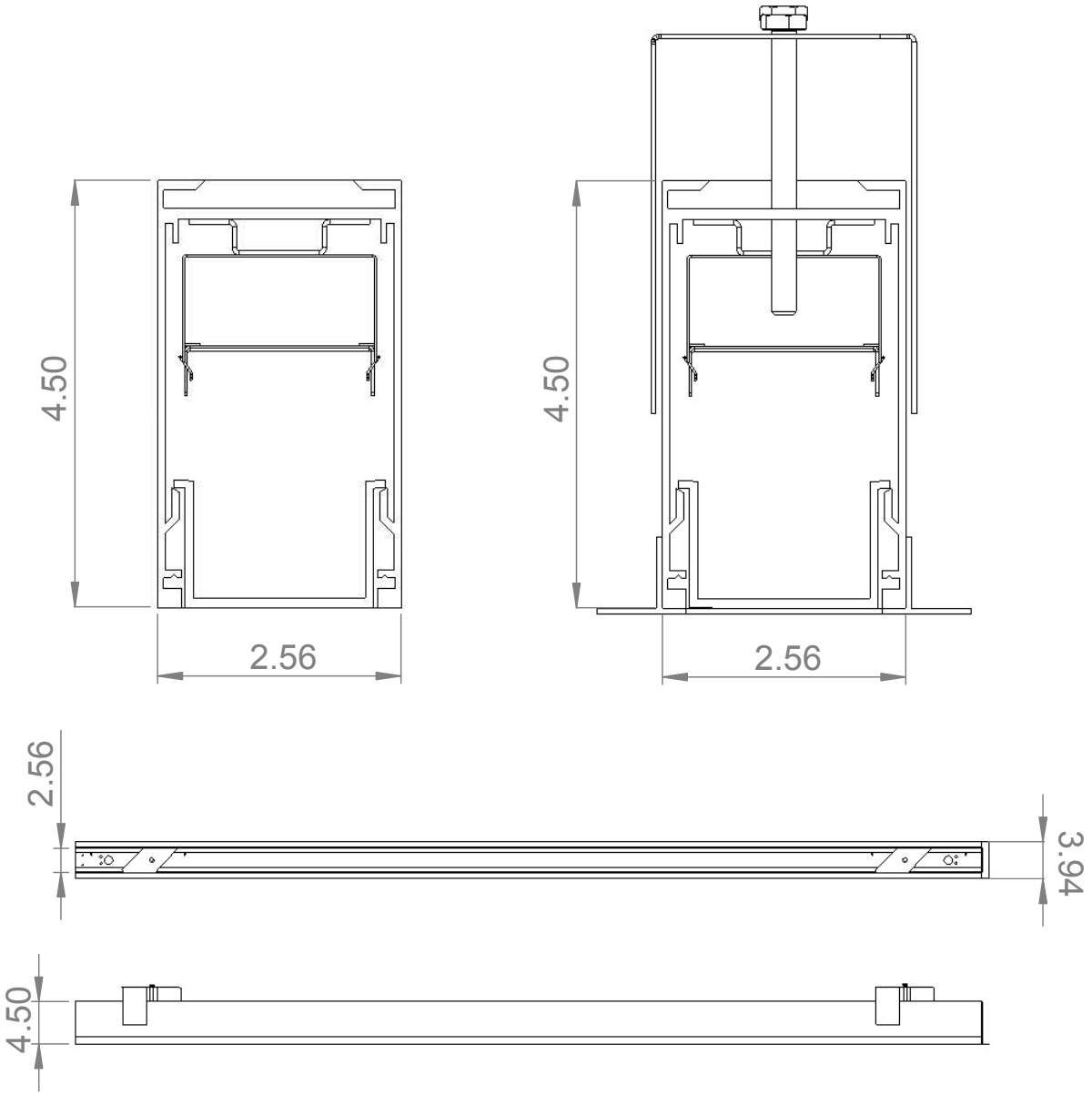
DIMENSIONS