ADVANTAGE ENVIRONMENTAL LIGHTING

N2M OUTDOOR LIGHTING
A DIVISION OF ADVANTAGE ENVIRONMENTAL LIGHTING

CATALOG #:

PROJECT:

TYPE:

X9BAA

RECESSED ALUMINUM BAA COMPLIANT LED EDGELIT EXIT SIGN

BUY AMERICAN ACT BAA COMPLIANT

ILLUMINATION: Ultra bright, energy efficient, long life Red or Green LEDs. UV-stabilized ultra-clear acrylic edgelit panel provides consistent, uniform illumination. Double face utilizes factory installed silver or white mylar background panel.

ELECTRICAL: The X9BAA achieves 80% LED lumen maintenance at 60,000 hours using long-life LEDs. Coupled with high-efficiency drivers, this luminaire provides superior illumination and an extended service life. Dual 120/277 voltage standard. Charge rate/power "ON" LED indicator light and push-to-test switch for mandated code compliance testing. 4.8V long life, maintenance-free, rechargeable NiCd battery (EM models only). Internal solid-state transfer switch automatically connects the internal battery to LED board for minimum 90-minute emergency illumination. Fully automatic solid-state, two rate charger initiates battery charging to recharge a discharged battery in 24 hours.

MOUNTING: Compatible with drywall or drop ceiling mount installations. Bar hangers included. Wall mount capability optional.

HOUSING: Premium-grade, extruded aluminum housing. Extruded aluminum trim assembly is easily detachable from below, providing accessibility for service or maintenance. Self-adhesive Chevron appliques and guide template provided for directional indication.

OPTIONS: Allows for the unit to be wall recessed mounted. 2C-120V/2C-277V: Voltage-specific dual circuit option on the AC-only unit enables it to be connected to two different supplies at the same time. SDT: Self-diagnostic feature performs monthly, biannual, and annual tests to ensure reliable operation and meets electrical and life safety codes. USA: Substantial transformation assembly in the U.S. complies with "Assembled in the USA" under the Buy American Act. SPV: UL Listed for 208/220/240 Volt, 50/60Hz. Custom: Signs available with requested 'special' wording.

LISTINGS: Meets UL924, NFPA 101 Life Safety Code, NEC, OSHA, Local and State Codes. UL Listed for damp locations (0°C – 50°C). Certified to CEC under Title 20 Regulations.

WARRANTY: 5-Year Full Replacement Warranty. Complete warranty and terms located at **www.aelnow.com/warranty**.

ORDERING INFORMATION. Example: X9BAA

SERIES	# OF FACES	LETTER	PANEL	TRIM PLATE	BATTERY	OPTIONS
X9BAA	1 Single Face	R Red G Green	C Clear	A Aluminum	Blank AC Only EM Battery Backup	WM Wall Mount 2C-120 Dual Circuit With 120V Input(1) 2C-277 Dual Circuit With 277V Input(1) SDT Self-Diagnostics(2) USA Assembled In USA SPV 208/220/240 Volt, 50/60Hz(3) CUSTOM Custom Wording

(1) Available only with AC units. (2) Available only with EM units. (3) Not available with SDT.

ADVANTAGE ENVIRONMENTAL LIGHTING

CATALOG #:	
PROJECT:	
TYPE:	
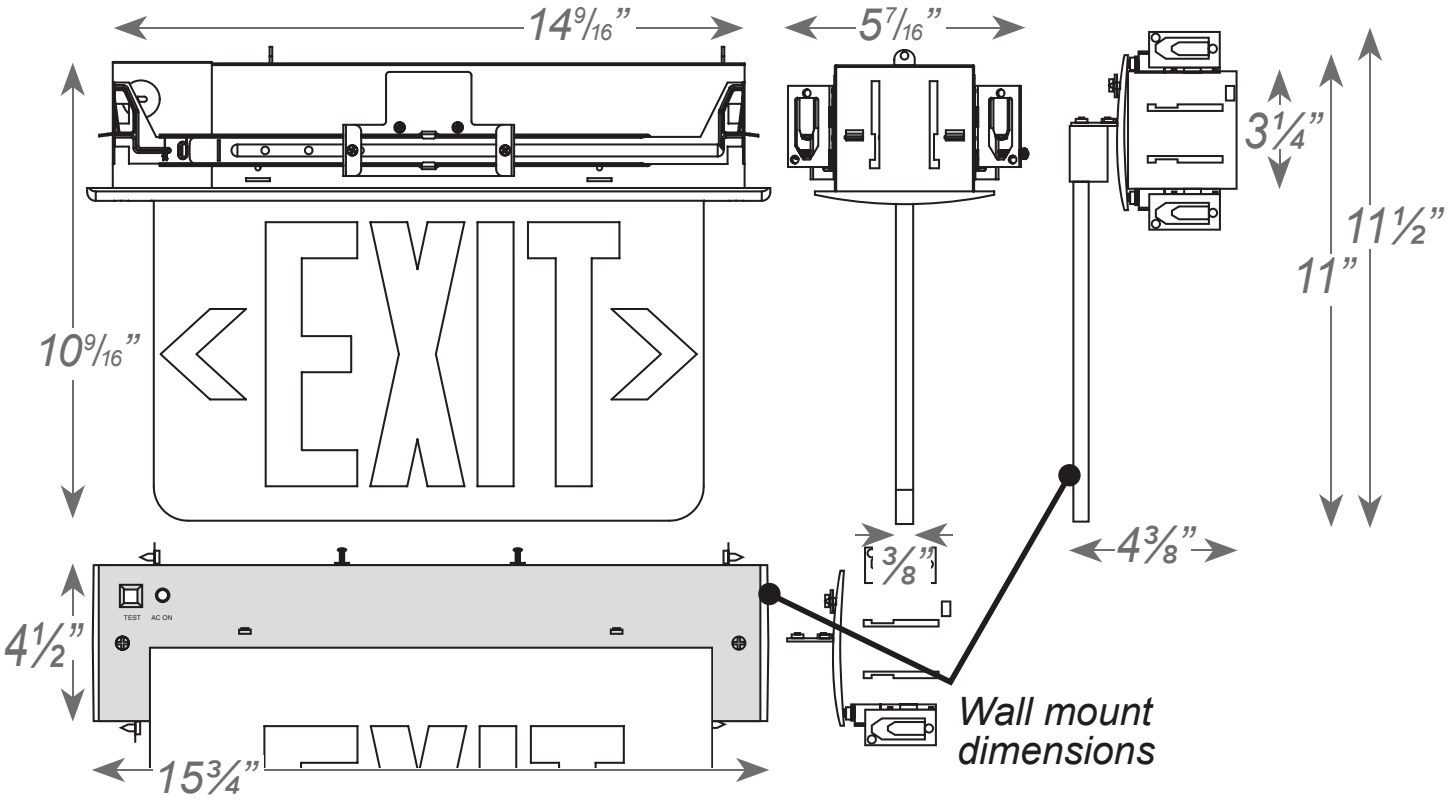
DIMENSIONS