Advantage. Environmental Lighting

X9

Recessed Aluminum LED Edgelit Exit

STANDARD | OPTIONAL

ILLUMINATION

- *Ultra bright, energy efficient, long life Red or Green LEDs.*
- *UV-stabilized ultra-clear acrylic edgelit panel provides consistent, uniform illumination.*
- *Double face utilizes factory installed silver or white mylar background panel.*

ELECTRICAL

- *Dual 120/277 voltage standard.*
- *Charge rate/power "ON" LED indicator light and push-to-test switch for mandated code compliance testing.*
- *4.8V long life, maintenance-free, rechargeable NiCd battery (EM models only).*
- *Internal solid-state transfer switch automatically connects the internal battery to LED board for minimum 90-minute emergency illumination.*
- *Fully automatic solid-state, two rate charger initiates battery charging to recharge a discharged battery in 24 hours.*

MOUNTING

- *Compatible with drywall or drop ceiling mount installations. Bar hangers included.*
- *Wall mount capability optional.*

HOUSING

- *Premium-grade, extruded aluminum housing.*
- *Extruded aluminum trim assembly is easily detachable from below, providing accessibility for service or maintenance. Available in optional black or white powder-coated finishes.*
- *Self-adhesive Chevron appliques and guide template provided for directional indication.*

OPTIONS

- *WM: Allows for the unit to be wall recessed mounted.*
- *2C-120V/2C-277V: Voltage-specific dual circuit option on the AC-only unit enables it to be connected to two different supplies at the same time.*
- *SDT: Self-diagnostic feature performs monthly, biannual, and annual tests to ensure reliable operation and meets electrical and life safety codes.*
- *USA: Substantial transformation assembly in the U.S. complies with "Assembled in the USA" under the Buy American Act.*
- *SPV: UL Listed for 208/220/240 Volt, 50/60Hz.*
- *Custom: Signs available with requested 'special' wording.*

WARRANTY / LISTING

- *Five year warranty on all electronics and housing. Battery prorated for five years.*
- *Meets UL924, NFPA 101 Life Safety Code, NEC, OSHA, Local and State Codes.*
- *UL Listed for damp locations (0°C – 50°C).*
- *Certified to CEC under Title 20 Regulations.*

DIMENSIONS

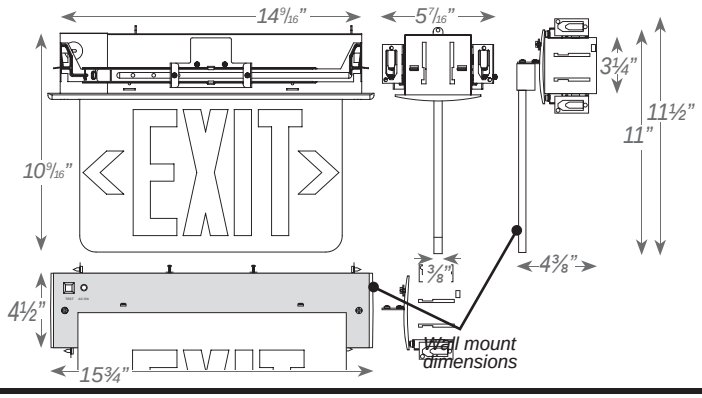

ORDERING INFORMATION

Sample Part Number: **X91RCWEM**

MODEL	No. of FACES		LETTER		PANEL		TRIM PLATE		BATTERY		OPTIONS	
X9	1	Single Face		Red	C	Clear[1]	W	White	(blank)		WM	Wall Mount[1]
	2	Double Face		Green		Mirror		Black	EM	Batte Backup	2C-120	Dual Circuit With 120V Input[2]
					W	White	A	Aluminum			2C-277	Dual Circuit With 277V Input[2]
											SDT	Self-Diagnostics[3]
											USA	Assembled In USA
											SPV	208/220/240 Volt, 50/60Hz[4]
											CUSTOM	Custom Wording

[1] With single face only.
[2] Available only with AC units.
[3] Available only with EM units.
[4] Not available with SDT.

Best # RELZXTE