Advantage Environmental Lighting

X16WL Wet Location LED Exit Sign

STANDARD	OPTIONAL
UL LISTED, LED, WET location	HTR

ILLUMINATION

- *Ultra-bright, energy efficient, long-life Red or Green LED.*

ELECTRICAL

- *Dual 120/277 voltage.*
- *Charge rate/power "ON" LED indicator light and push-to-test switch for mandated code compliance testing.*
- *4.8V long-life, maintenance-free, rechargeable NiCd battery.*
- *Internal solid-state transfer switch automatically connects the internal battery to LED board for minimum 90-minute emergency illumination.*
- *Fully automatic solid-state, two-rate charger initiates battery charging to recharge a discharged battery in 24 hours.*

MOUNTING

- *Mounting hardware provided for back surface wall mount.*

HOUSING

- *5VA flame retardant, UV-stabilized polycarbonate gray finish.*
- *High-impact resistant, UV-stabilized polycarbonate clear lens.*
- *Corrosion-resistant enclosure with engineering grade silicone gasket.*
- *Top and side K/O's provided for conduit feed applications.*
- *EZ snap-out Chevron directional indicators.*

OPTIONS

- *HTR: Optional internal heater for cold temperature applications.*

WARRANTY/LISTING

- *Five year warranty on all electronics and housing. Battery pro-rated for five years.*
- *Meets UL924, NFPA 101 Life Safety Code, NEC, OSHA, Local and State Codes.*
- *UL listed for wet locations. (10°C – 40°C)*

DIMENSIONS

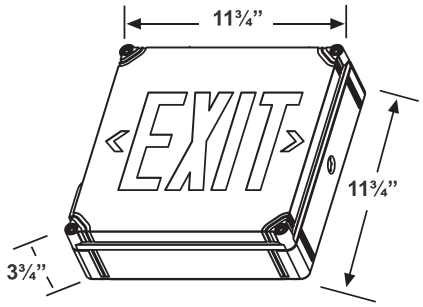

Sample Part Number: ***X16WL-1-R-EM***

ORDERING INFORMATION

Special voltage options available.

Check with your AEL Representative.

Model	No. of faces	Letter Color	Battery	Options
X16WL	1 Single Face	R Red	Blank AC Only	HTR Internal Heater
Best # EZRXTEU		G Green	EM Battery Backup	

T (817) 468-3591 E info@aelnow.com www.aelnow.com

Specifications subject to change without notice.

Advantage Environmental Lighting

X16WL Wet Location LED Exit Sign

ELECTRICAL INFORMATION

Catalog Number	Input Watts (W)		Input Amps (A)	
	120V	277V	120V	277V
X16WL/EM	5.4	5.4	0.045	0.019