ADVANTAGE ENVIRONMENTAL LIGHTING

MADE IN THE USA

CATALOG #:

PROJECT:

TYPE:

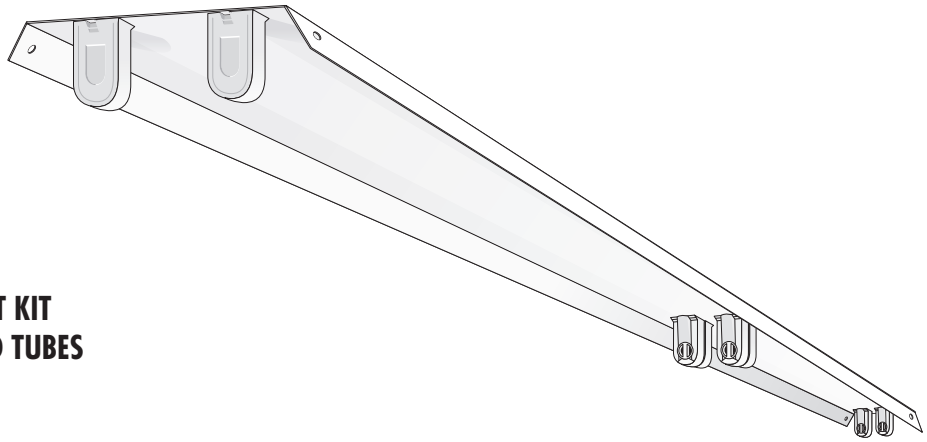

SRLW

STRIP RETROFIT KIT WIRED FOR LED TUBES

Our **SRLW** is a Retrofit Kit wired for LED Tubes that is designed to modify existing fixtures to higher efficiency lamping options. It is designed to save time and energy to upgrade fixtures rather than replacing them. Installation is quick and intuitive, and is custom designed to work with existing recessed retail fixtures.

APPLICATIONS: The SRLW series of retrofit insert kits for LED tubes were designed to be high quality, energy efficient fixtures for use in retail applications, offices, government facilities, schools, and public areas.

CONSTRUCTION: The fixture is constructed of CRS (heavy gauge cold rolled steel). Designed to retrofit into most existing recessed 4′ or 8′ strip fixtures.

OPTICAL SYSTEM: White polyester polymer finish with a minimum 93% reflectivity.

ELECTRICAL SYSTEM: 120-277V applications.

MOUNTING: The fixture can be retrofitted into a recessed strip.

LISTINGS: ETL and cETL Listed. Damp location rated.

WARRANTY: 5-Year Limited Warranty. Complete warranty and terms located at **www.aelnow.com/warranty**.

Ordering Information on Next Page

ADVANTAGE ENVIRONMENTAL LIGHTING

CATALOG #:	
PROJECT:	
TYPE:	

ORDERING INFORMATION. Example: SRLW-8-40-28T8-DE-WT

SERIES	SIZE	CCT	LAMPS REPLACEMENT	WIRE APPLICATION	LED	OPTIONS
SRLW	4 4' (2-4' Lamps) 8 8' (4-4' Lamps	30 3000K 35 3500K 40 4000K 50 5000K	17 17W T8 28T8 28W T8 32 32W T8 54 54W T5	BLANK SINGLE END WIRING* DE DOUBLE END WIRING**	LED WIRED FOR LED WT LAMPS WITH TUBES INCLUDED	12EBL 12 Watt Emergency Ballast

** Non-Shunted sockets wired at one end (BLANK)*
***Shunted sockets wired with white, opposite end wired with black (DE)*

FIXTURE DIMENSIONS AND DETAILS

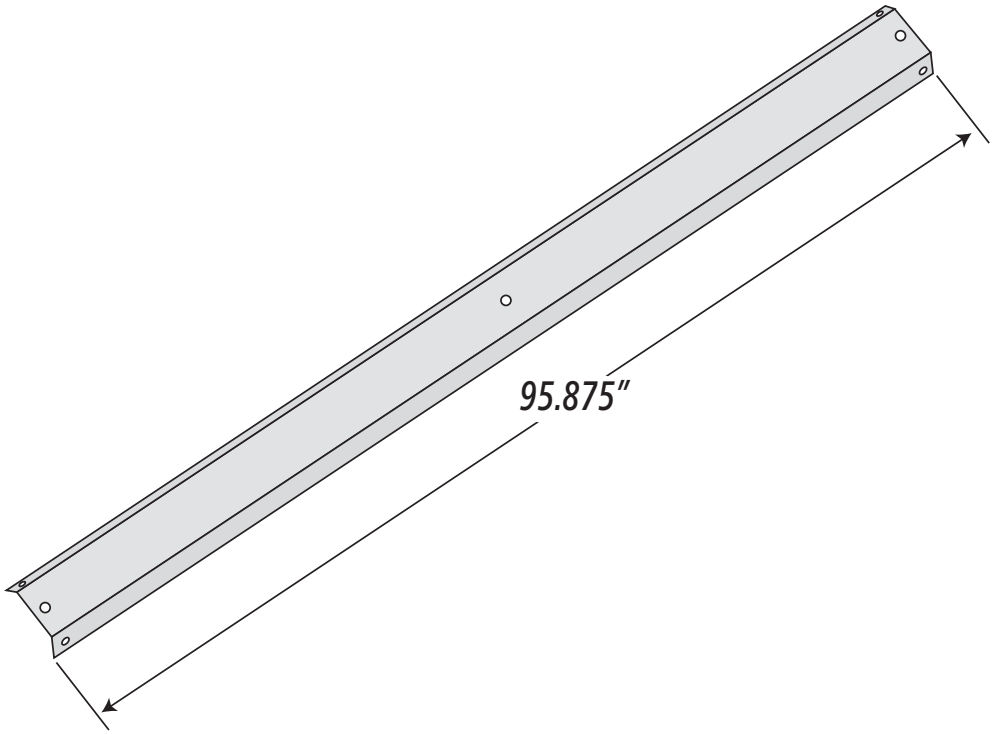

ADVANTAGE ENVIRONMENTAL LIGHTING

CATALOG #:	
PROJECT:	
TYPE:	

Existing fixture

Option A for mounting retro kit

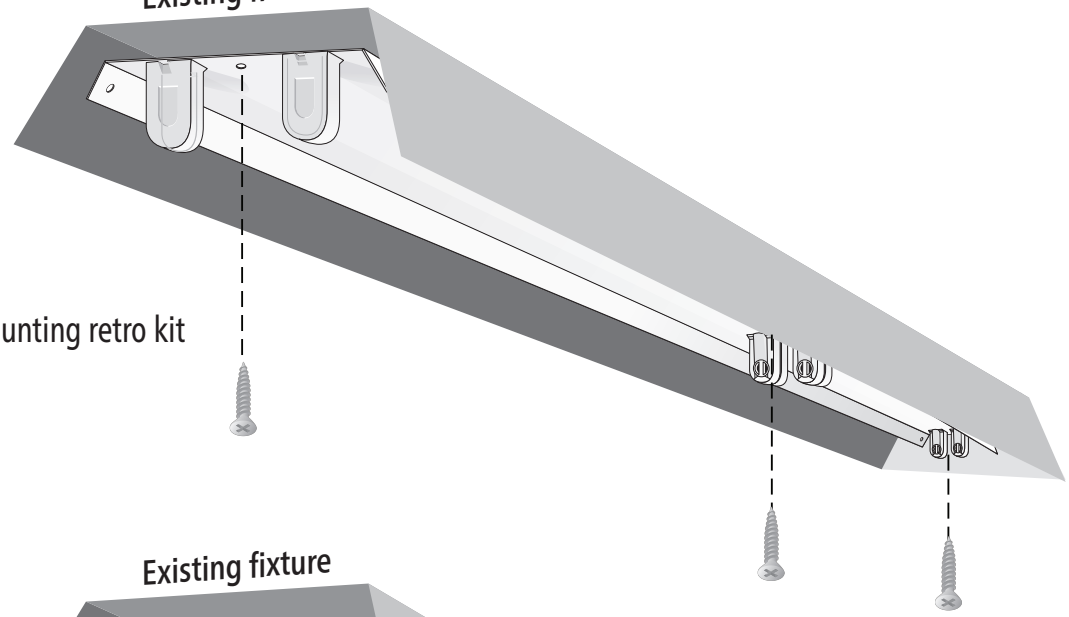

Existing fixture
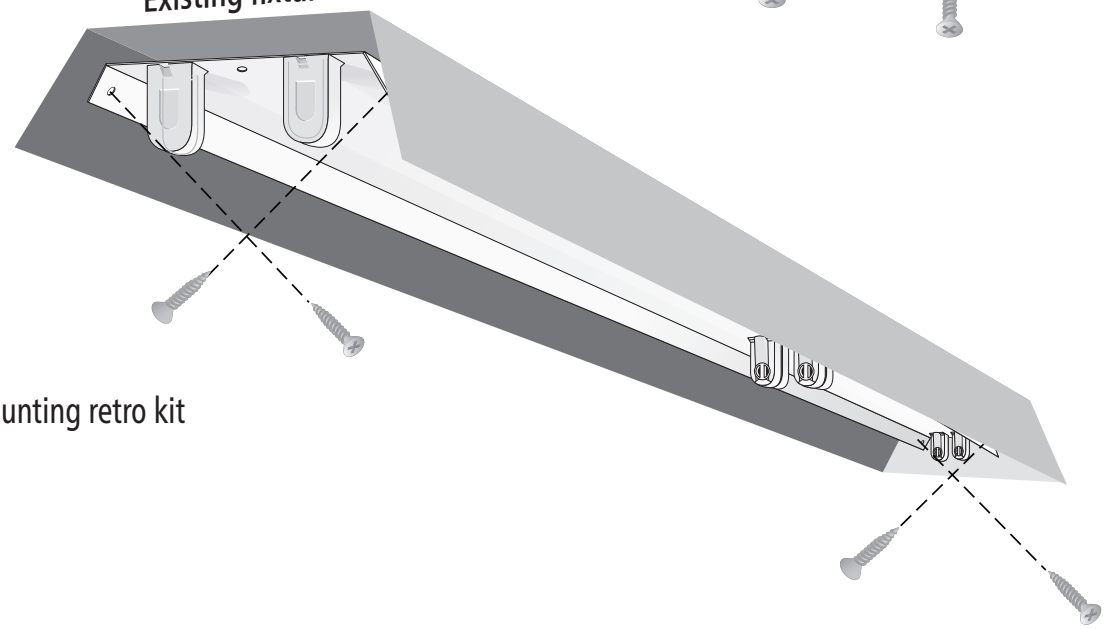
Option B for mounting retro kit