ADVANTAGE ENVIRONMENTAL LIGHTING

MADE IN THE USA

CATALOG #:

PROJECT:

TYPE:

SPTMRI

SCENIC PANEL TROFFER FOR MRI/IMAGING SUITES

DESCRIPTION: The SPTMRI Is a recessed luminaire designed for use in MRI rooms and imaging suites. Sleek design and non-ferrous construction make the fixture safe for use around MRI equipment. Artwork creates a "skylight" effect, which can be soothing for patients.

ELECTRICAL SYSTEM: Long-life LED system rated for >100K hours (L70 @ 45°C). Complies with federal energy efficiency standards. Remote mounted power supply available with up to 8 dimming drivers.

CONSTRUCTION: Non-Ferrous aluminum construction. White powdercoat finish.

ARTWORK: Available in 3 different cloud options, and 3 different space options. Consult factory for additional options.

LISTINGS: NSF2 rated (Non-Food, Splash Zone). ETL and cETL listed. Made in the USA. FCC Part 15 certified for EMI/RFI emissions.

MOUNTING: Recessed Grid mounting.

WARRANTY: 5-Year Limited Warranty. Complete warranty and terms located at **www.aelnow.com/warranty**.

Ordering Information on Next Page ►

ADVANTAGE ENVIRONMENTAL LIGHTING

MADE IN THE USA

CATALOG #:

PROJECT:

TYPE:

ORDERING INFORMATION
Example: SPTMRI-65-40W-L22-S2

SPTMRI				
SERIES	**CCT**	**OUTPUT**	**ORIENTATION**	**ARTWORK**
SPTMRI	65 6500K	30W 3750lm	L22 ONE 2'X2' Landscape	C1 Clouds #1
		40W 5000lm	L42 TWO 2'X2's Landscape	C2 Clouds #2
			L44 FOUR 2'X2's Landscape	C3 Clouds #3
			L64 SIX 2'X2's Landscape	S1 Space #1
			L66 NINE 2'X2's Landscape	S2 Space #2
			P24 TWO 2'X2' Portrait	S3 Space #3
			P46 SIX 2'X2's Portrait	XX Custom (consult factory)
			See last page for orientation diagrams	See next page for artwork examples

REMOTE MOUNTED POWER SUPPLY Ordering Information (SEE LAST PAGE FOR DETAILS)

SERIES	# OF FIXTURES PER DRIVER	# OF DRIVERS	OPTIONS
RPB6 Fits up to 6 drivers	1 1 Fixture per Driver	D1 1 LED 1% Dimming Drivers	AM Anti-Microbial White Paint
RPB9 Fits up to 9 drivers	2 2 Fixtures per Driver	D2 2 LED 1% Dimming Drivers	
	3 3 Fixtures per Driver	D3 3 LED 1% Dimming Drivers	
	4 4 Fixtures per Driver	D4 4 LED 1% Dimming Drivers	
	X X Fixtures per Driver	D5 5 LED 1% Dimming Drivers	
		D6 6 LED 1% Dimming Drivers	
		D7 7 LED 1% Dimming Drivers	
		D8 8 LED 1% Dimming Drivers	
		D9 9 LED 1% Dimming Drivers	

Link to POWER SUPPLY BOX CUT SHEET: https://aelnow.com/cutsheets/RPB.pdf

Dimensions on Next Page ►

ADVANTAGE ENVIRONMENTAL LIGHTING

CATALOG #:

PROJECT:

TYPE:

ARTWORK

C1

S1

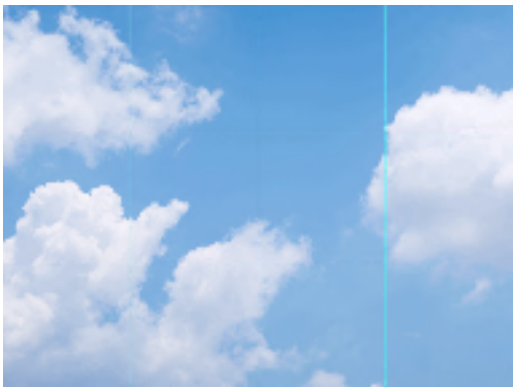

C2

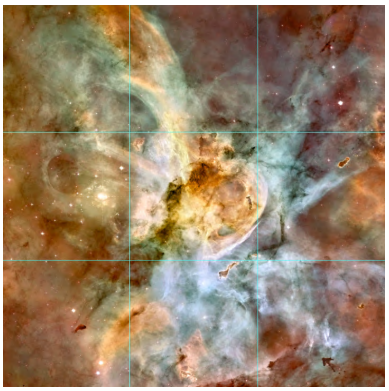

S2

C3

S3

ADVANTAGE ENVIRONMENTAL LIGHTING

CATALOG #:	
PROJECT:	
TYPE:	

FIXTURE DIMENSIONS

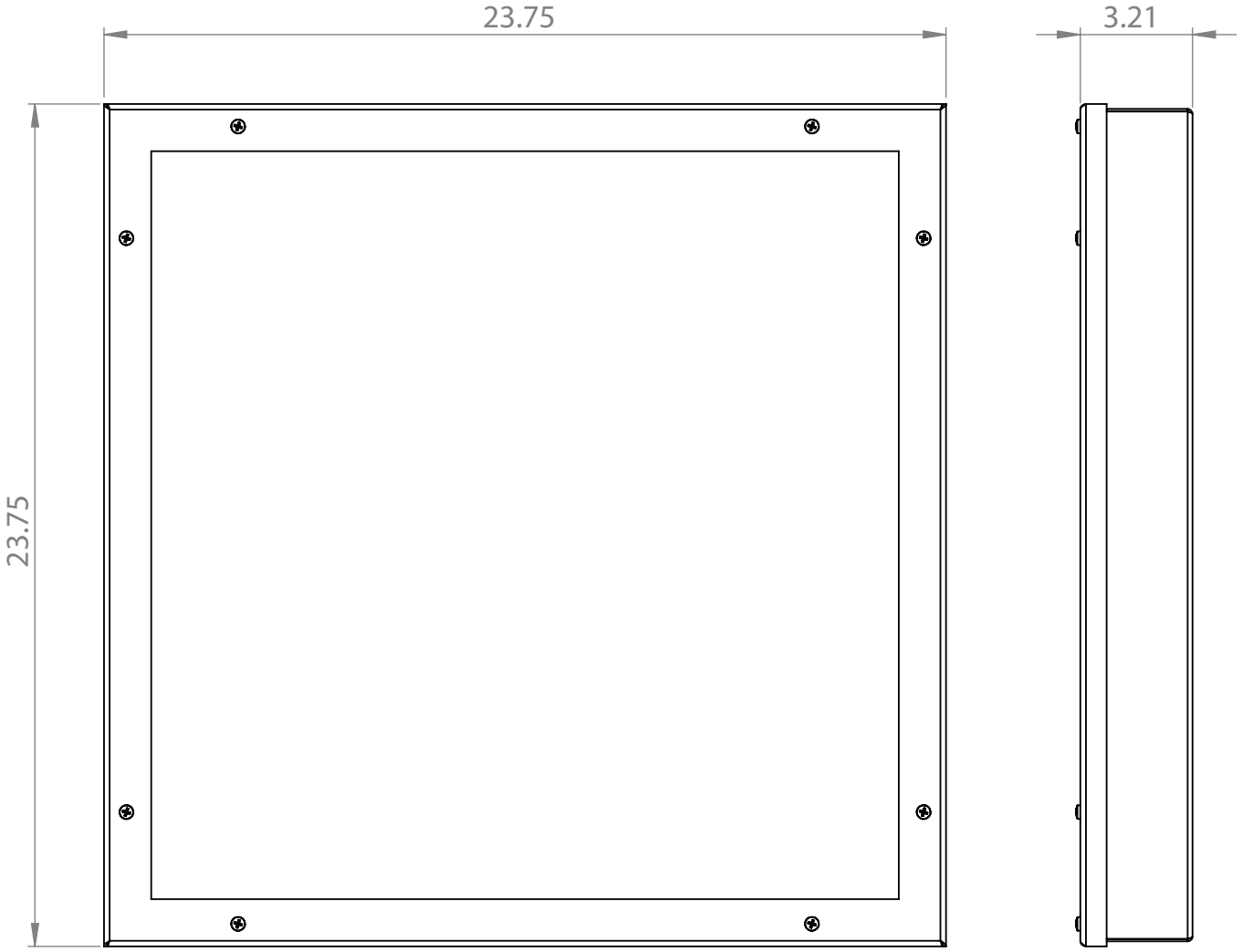

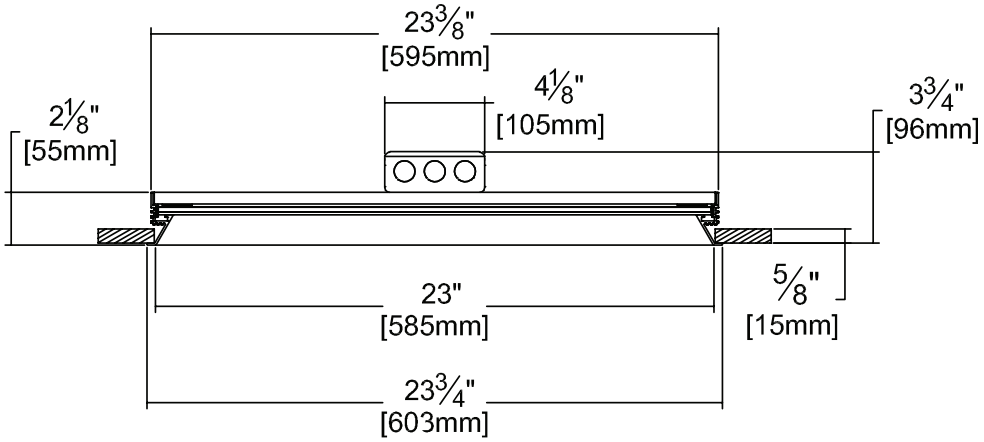

ADVANTAGE ENVIRONMENTAL LIGHTING

CATALOG #:

PROJECT:

TYPE:

ORIENTATIONS

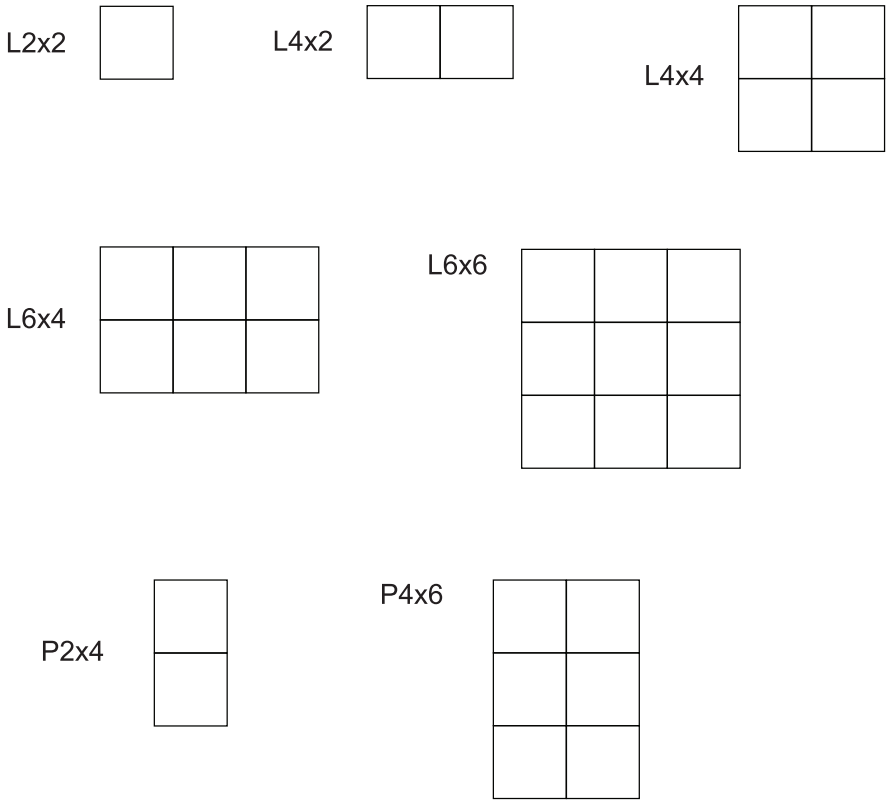

ENERGY AND PERFORMANCE DATA

INPUT VOLTAGE:	120/277VAC
POWER CONSUMPTION:	30 OR 40 WATTS*
DELIVERED LUMEN OUTPUT:	3750-5000
STANDARD DIMMING CONTROL:	0-10V
CCT:	6500K
CRI:	82 (MINIMUM)
LIFE TIME RATING:	>120,000 HRS @ L70
INPUT FREQUENCY:	50/60 HZ
POWER FACTOR:	>0.9
OPERATING TEMP:	-30° TO 50° C

*ACTUAL WATTAGE MAY DIFFER BY ±5% WHILE OPERATING 120/277V ±10%

ADVANTAGE ENVIRONMENTAL LIGHTING

CATALOG #:	
PROJECT:	
TYPE:	

REMOTE POWER BOX

RPB6 (UP TO 6 DRIVERS)

RPB9 (UP TO 9 DRIVERS)

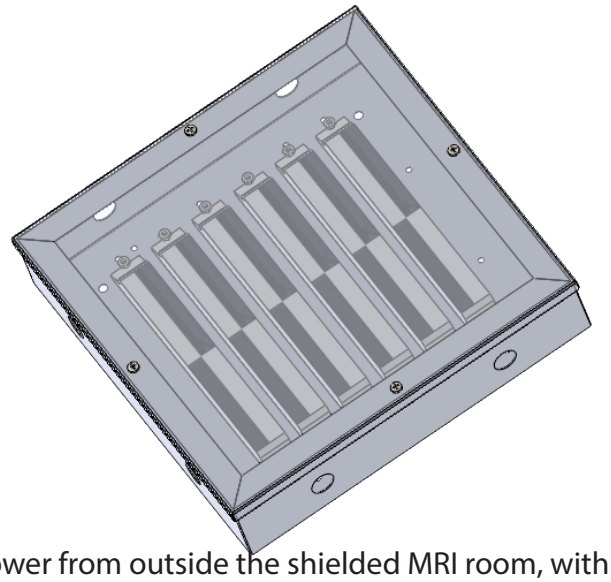

Electronic remote power supply provides power from outside the shielded MRI room, within the remote power supply enclosure.

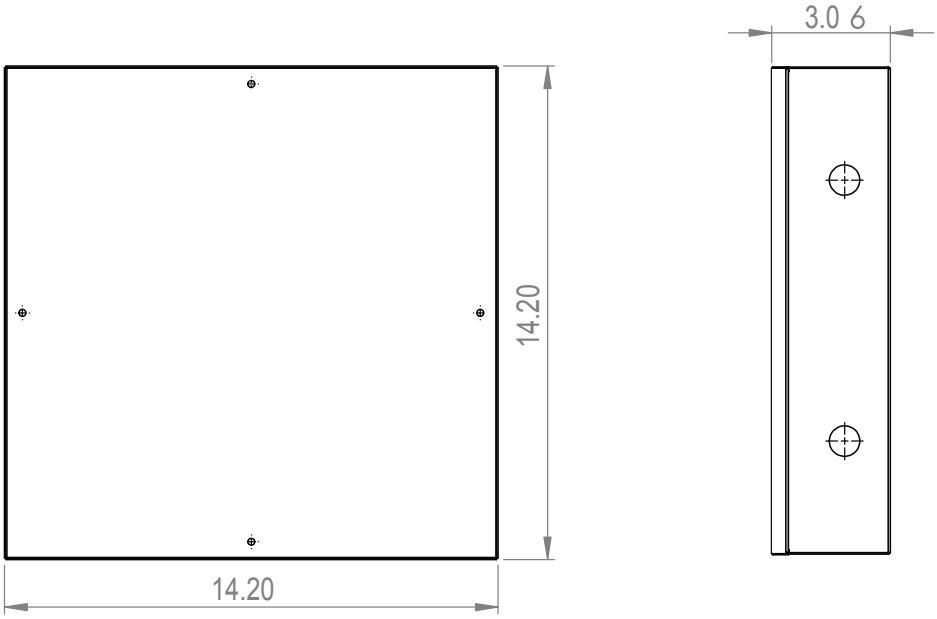

MOUNTING INSTRUCTIONS

1. Mount the remote mounted power supply outside the MRI room.
2. Each driver will have an individual quick-connect for ease of wiring.
3. Ensure that all power/dimming wiring is completely shielded in grounded conduit. Use a minimum of 18 AWG low voltage supply wire.
4. Connect wiring to the driver and run to the installed fixtures. Connect hot and neutral wires to the light fixtures quick connects.
5. Installation is complete.