ADVANTAGE ENVIRONMENTAL LIGHTING

MADE IN THE USA

CATALOG #:	
PROJECT:	
TYPE:	

RET10

10″ ROUND, F-CLASS COMMERCIAL RETROFIT

LED 10″ DOWNLIGHT COMMERCIAL-GRADE RETROFIT KIT, NON-IC, 1100-2000 LUMENS

Our **RET10** is a Commercial-grade 10 inch LED recessed, non-IC LED retrofit kit with medium beam spread, featuring superior thermal management and simple installation. Light engine features LED module and LED driver with outputs ranging from 1100 to 2000 lumens and color temperatures from 3000K to 4000K. Multiple reflector finishes and emergency battery back-up options available.

ELECTRICAL SYSTEM: High energy efficiency system up to 107 lm/W. Wide range of lumen packages from 1100-2000 lm. High quality of light with CRI 80 and 3 SDCM color consistency. 0-10V dimming to 1% of lumen output. Input volts 120V. Minimum 50,000 hours of life at L70 standard.

CONSTRUCTION: Self-contained LED/Driver module system provides low profile and easy installation from below ceiling. Universal friction clips provide robust retention of LED/Driver module and reflector system to pre-existing downlight housing.

LISTINGS: Manufactured and Listed to UL 1598, ETL and CSA standards. Non-IC rated. Insulation to be kept 3″ from luminaire. Suitable for Damp Locations; Wet location under covered ceiling. All photometric tests performed by an accredited NVLP facility and in accordance to IESNA LM-79-2008 testing procedures. ENERGY STAR® certified product.

WARRANTY: 5 - Year Limited Warranty. Complete warranty and terms located at: **www.aelnow.com/warranty.**

Ordering Information on Next Page ►

ADVANTAGE ENVIRONMENTAL LIGHTING

CATALOG #:

PROJECT:

TYPE:

ORDERING INFORMATION:
Example: RET10-40-15-1-REM

SERIES	CCT		OUTPUT		VOLTAGE		REFLECTOR		REFLECTOR FINISH		OPTIONS	
RET10	30	3000K	11	1100	1	120V	F1060	Medium Distribution	SCL-R	Specular Clear	REM	Emergency battery back-up. Remote test button & indicator light.
	35	3500K	15	1500					SGC-R	Soft Glow Clear	GR-10-xx	10" Goof Ring (specify outer dimension in inches where 'xx' are).
	40	4000K	20	2000					WHT-R	White Matte	L3DA	Lutron Hi-Lume 1% 3-wire dimming driver

*All trims supplied standard with white painted flange.

Lumens	Wattage*
1100	10.5
1500	15.1
2000	20.1

All measured at 3000K

**Actual Wattage/Lumens may vary.*

ADVANTAGE ENVIRONMENTAL LIGHTING

CATALOG #:

PROJECT:

TYPE:

DIMENSIONS

Dimensional Data: LED 10” Commerical Downlight Retrofit Kit, non-IC, 1100-2000 Lumens

Ceiling Cut Out 10.13″

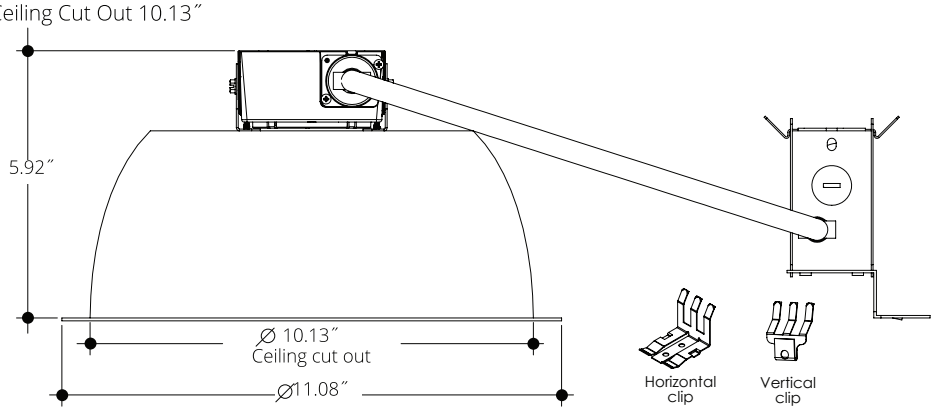

F-CLASS COMMERICAL RETROFIT KIT CONTENTS

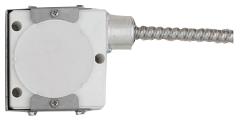

Test Number
PHM-RPT-180302-07
Model
RET-V10OFCR1-1135K
Lumens
1046.39
Efficacy
97.15
SC
0.9728

Curve

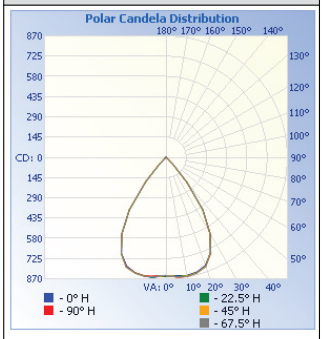

Cone of Light

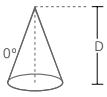

	Center Beam fc		
1.7	293	2.3	2.4
3.3	77.8	4.5	4.7
5.0	33.9	6.8	7.1
6.7	18.9	9.1	9.6
8.3	12.3	11.3	11.9
10.0	8.47	13.6	14.3

Candela Table

Degrees Vertical	Candela
0.0	847
1.0	846
3.0	848
5.0	853
7.0	856
9.0	858
10.0	859
15.0	850
20.0	823
25.0	753
30.0	630
40.0	232
45.0	71
50.0	14
55.0	9
60.0	7
65.0	5
70.0	4
75.0	4
80.0	3
85.0	3
90.0	3
95.0	3
100.0	3

Zonal Lumen Summary

Zone	Lumens	% Luminaire
0-30	663.2	63.4
0-40	936.6	89.5
0-60	1014.5	97
60-90	12.3	1.2
70-100	10.1	1
90-120	8.6	0.8
0-90	1026.8	98.1
90-180	19.6	1.9
0-180	1046.4	100

VANTAGE LIGHTING F-CLASS Commercial Multipliers

CRI	MULTIPLIER
80	1

KELVIN	MULTIPLIER
4000K	1.035
3500K	1
3000K	0.975

FINISH	MULTIPLIER
SCL	1
SGC	0.95
WHT	0.87