ADVANTAGE ENVIRONMENTAL LIGHTING

CATALOG #:	
PROJECT:	
TYPE:	

POLARIS 400W

STANDARD

Intertek | DLC | ip65 waterproof | 130 LM / W | INPUT 100-277 V | CE | RoHS compliant

The **POLARIS AREA LIGHT** is a group of premium architectural LED lights designed to illuminate parking areas, pathways, building facades, loading docks and a wide variety of other large general site lighting applications. Multiple mounting options make the 400W Polaris Area Light a versatile light for flood lighting, pole, ground and wall mounted area lighting and other outdoor lighting requirement

FEATURES

- *Standard in 5000K*
- *100-277V AC input voltage providing long-life LEDs with 50,000 hours of operation (Ta=86 F @LM70).*
- *Optional 480V AC input voltage*
- *52,000 lumens.*
- *Philipps Lumileds LED chips.*
- *Premium SOSEN driver.*
- *Die cast aluminum housing with durable dark bronze powder coat finish with at least 2 mils thick on all surfaces and a heat resistant polycabonate lens.*

WARRANTY & LISTING

- *ETL.*
- *DLC Listed*
- *IP65 "wet Location" rated.*
- *Flicker free per IEEE 1789-2015 (no observable adverse effects of flicker at 100% light output level).*
- *5-year warranty on all electronics and housing.*

- *Power factor > 0.90.*
- *Universal 100-277 AC voltage (50-60 Hz).*
- *Total harmonic distortion <20%.*
- *Color rendering Index >80.*
- *Optional full and half glare shields are available.*
- *Optional Dusk to Dawn sensor.*
- Easy installation in new construction or retrofit.
- *Wireway enclosure is sealed with a water-tight, silicon rubber gasket.*

MOUNTING OPTIONS & DIMENSIONS

- Trunnion and Slip-fitter mounting is adjustable up to 90 degrees in both directions.

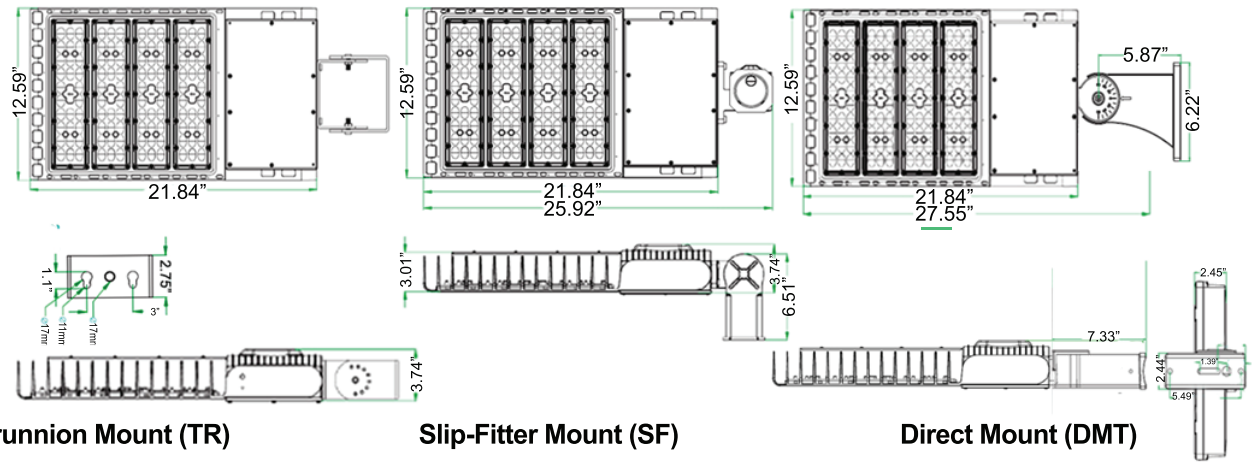

Trunnion Mount (TR) **Slip-Fitter Mount (SF)** **Direct Mount (DMT)**

ORDERING INFORMATION

PART #	Color Temp	Mounting options		
POLARIS	5000K	TR DMT SF	Trunnion Mount ADJ Direct Mount Split-Fitter Mount	Blank: 100V-277V HV: 200V-480V

ADVANTAGE ENVIRONMENTAL LIGHTING

CATALOG #:	
PROJECT:	
TYPE:	

Part No	POLARIS-400W-5K
LED Type	PHILIPS LUMILEDS
LED QTY	448 PCS
Luminous flux	130 LM /W (CCT=5000k) 5%
Luminous flux	52,000 LM (CCT=5000K) 5%
CCT	5000 K
Beam Angle	TYPE III/90 X 120
CRI	> 80 Ra
System Efficiency	> 90
Power Supply	SOSEN
Input Voltage	AC 100- 277 V or 200-480v
Power Frequency	50 / 60 Hz
Output Voltage	DC 28.8-48V
Output Current	5.9-5A (Constant Current)
Power Efficiency	> 90%

Power factor	> 0.90
Total Harmonic Distortion	< 15%
System Power Consumption	400 W ± 5 W
LED Power Consumption	390 W ± 5 W
Fixture Material	ADC12 Aluminum alloy
Ingress Protection	IP 65
Net Weight	20.5 Lbs ± 1.1 Lbs
Gross Weight	22.22 Lbs ± 1.1 Lbs
Life Span	>50,000 Hrs (Ta=86°F@LM 70)
Junction temperature	< 167° F (Ta=86°F)
Storage Temperature	(-40° F ~ + 158° F)
Operating Temperature	(-22° F ~ +122° F)
Operating Humidity	15 – 90 % RH
Outlook Dimensions	L 25.9" * W 12.59" * H 3.74"
Carton Size	L 31.3" * W 14.5" * H 5.7"

ACCESSORIES

Shields

Half

POLARIS-LG-HGS

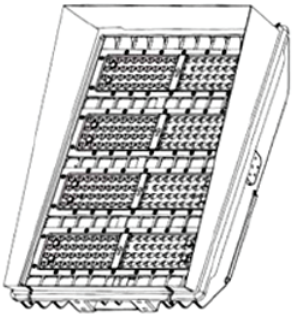

Full

POLARIS-LG-HGS

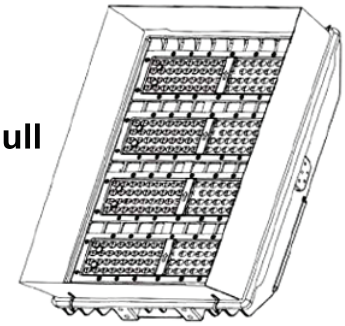

PHOTOMETRIC DATA

400W - 52,000 LUMENS
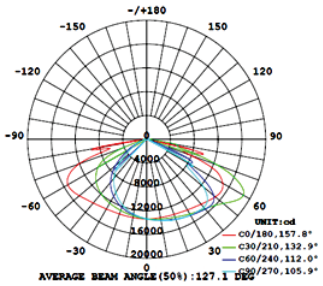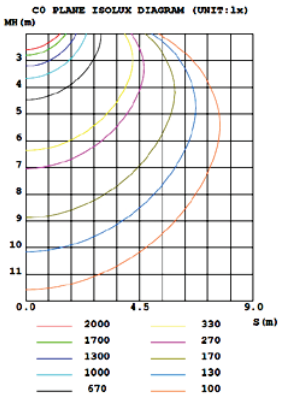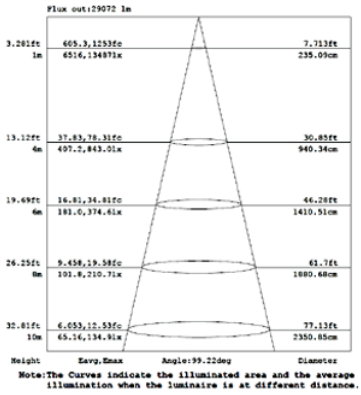
LUMINOUS INTENSITY DISTRIBUTION DIAGRAM