ADVANTAGE ENVIRONMENTAL LIGHTING

CATALOG #:	
PROJECT:	
TYPE:	

PG18 18-CELL PARABOLIC LOUVER

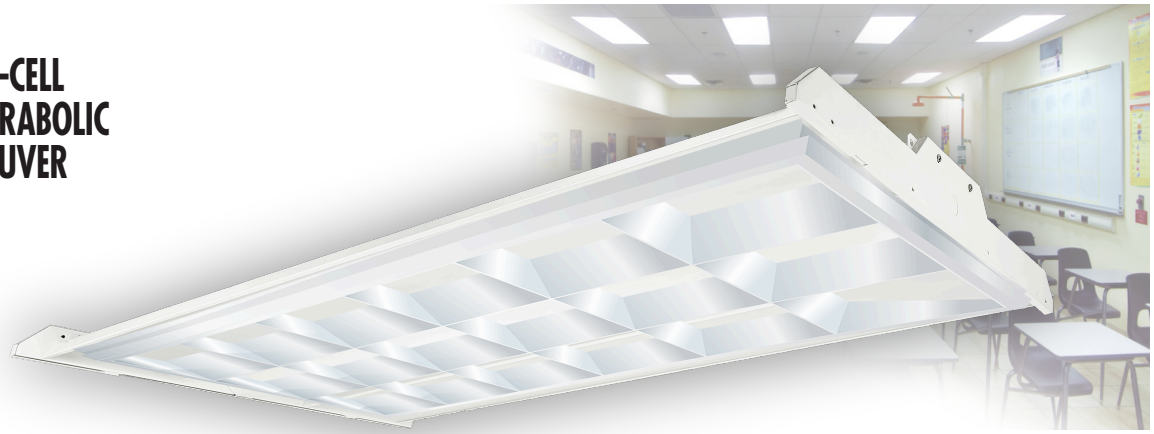

The **PG18** is a high-quality aluminum louver designed for use in a wide range of recessed or surface mounted light units. Smooth edges and a sleek and light-weight aluminum body makes it attractive and easy to install.

CONSTRUCTION: Aluminum and die-formed metal T-BAR latches and hinges (attached by rivets). The surface is clean, bright, and smooth with no sharp edges.

MOUNTING: Can be used as a retro-fit louver into almost any light unit body. Some modification to the existing light unit body maybe needed.

WARRANTY: 5-Year Limited Warranty. Complete warranty and terms located at **www.aelnow.com/warranty**.

ORDERING INFORMATION

Example: PG18

SEE NEXT PAGE DIMENSIONS

ADVANTAGE ENVIRONMENTAL LIGHTING

CATALOG #:	
PROJECT:	
TYPE:	

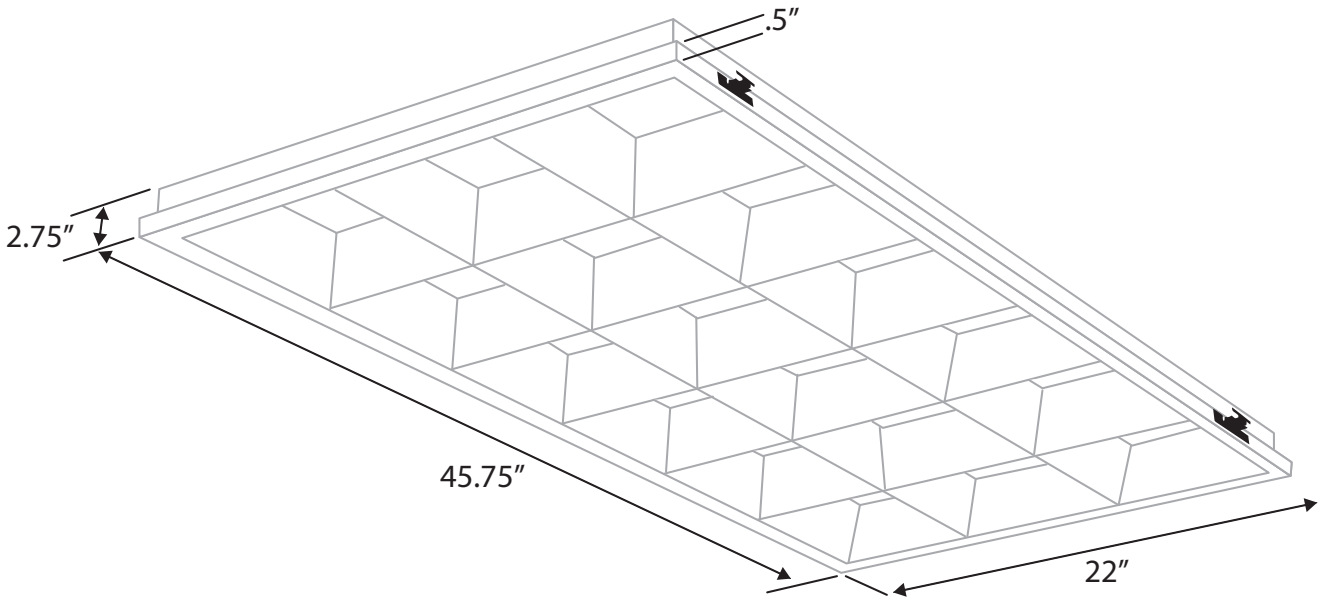

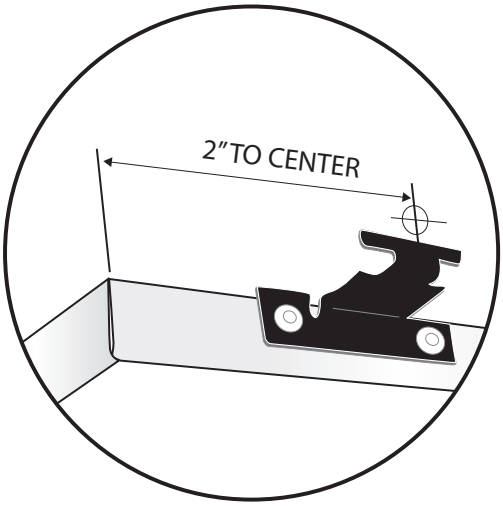

One side has two T-BAR hinges centered 2" from edge

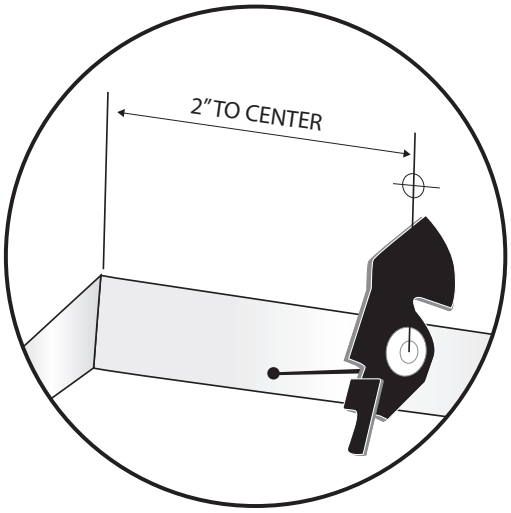

Other side has two spring-loaded release levers