ADVANTAGE ENVIRONMENTAL LIGHTING

MADE IN THE USA

CATALOG #:	
PROJECT:	
TYPE:	

OSL

OUTDOOR SIGN LIGHTER 3/4" HUB

(WET LOCATION FOR DOWNLIGHT ONLY)

DESCRIPTION: This Series OSL Outdoor Sign Lighter specification-grade fixture rotates up to 90º. This durable fixture is ideal for applications that include parking and commercial / retail outdoor areas for sign and walkway lighting, specifically for mounting in a downward orientation for downlighting purposes. 3/4" hub.

CONSTRUCTION: Powder-coated white aluminum extrusion with white interior and cast-aluminum end plates. The diffuser/lens is a smooth clear acrylic. Available in 4 and 8 foot nominal lengths.

MOUNTING: Fixtures are typically mounted on conduit. Downlight only.

OPTICAL: Multiple Kelvin temperatures (3000K, 3500K, 4000K, 5000K); consult factory for RGBW option. Multiple lumen packages/wattages available through use of programmable drivers.

ELECTRICAL SYSTEM: CRI >80 standard. L70: >50,000 Hours. Dimming: 0-10V 120-277V standard, 120V ELV/TRIAC optional.

LISTINGS: ETL listed. Suitable for wet locations (IP65, downlight only)

WARRANTY: 5-Year Limited Warranty. Complete warranty and terms located at **www.aelnow.com/warranty**.

ORDERING INFORMATION. Example: OSL-48-40-57-DMV

SERIES	SIZE		CCT		WATTAGE/LUMENS		DRIVERS		OPTIONS	
OSL	48	48"	30	3000K	48	48 Watts / 5900 Lumens	DMV	0-10V Dimming	DMX	Addressable DMX Decoder for DMX512 Control (Controller Supplied by Others). Consult factory for requirements.
	96	96"	35	3500K	57	57 Watts / 6500 Lumens	G120	ELV/TRIAC Dimming at 120V ONLY		
			40	4000K	96	96 Watts / 11,800 Lumens	D1MV	0-10V Dimming (dim to 1%)		
			50	5000K	114	114 Watts / 13,000 Lumens				

RGBW

ADVANTAGE ENVIRONMENTAL LIGHTING

CATALOG #:

PROJECT:

TYPE:

DIMENSIONS

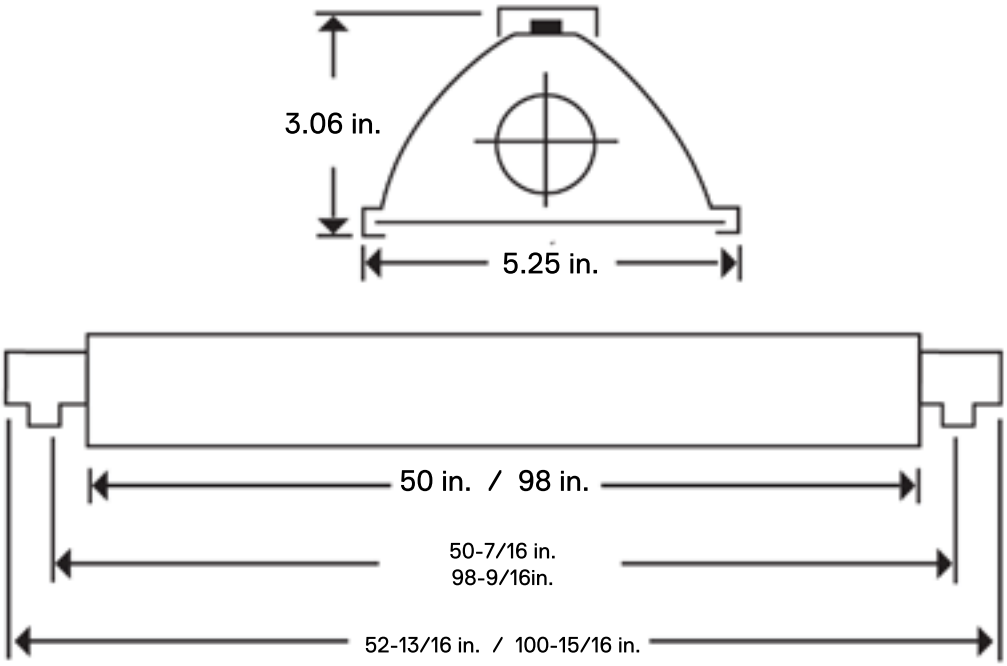

DIMENSIONS

4 ft. - 52.81"L x 5.25"W x 3.06"H
8 ft. - 100.94"L x 5.25"W x 3.06"H

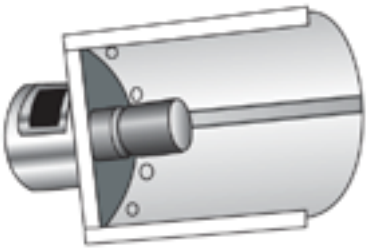

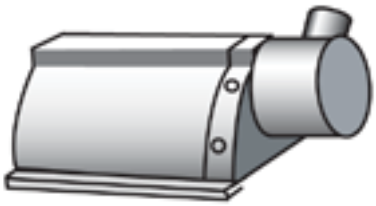

*Programmable LED drivers allow custom configured wattages and corresponding lumens.
NOTE: Values shown are typical or recorded under standardized conditions at 25°C. Actual performance may vary based environment or application. Specifications are subject to change without notice. We reserve the right to change design, materials, LED's and finish in any way that will not alter installed appearance or reduce function and performance.