Advantage Environmental Lighting

NYXEM6

New York Approved LED Exit & Incandescent Emergency Combo

STANDARD

UL LISTED | DAMP LOCATION | NY APPROVED

ILLUMINATION

- *Two fully-adjustable 12 watt, glare-free lamp heads with field installable 3rd emergency lighting head included.*
- *K/Os provided on sides of unit to relocate lamp heads.*
- *High-performance smooth metal reflector and glass lens for optimal light distribution.*
- *Ultra-bright, energy efficient, long-life Red LED.*
- *NY compliant 8" exit letters.*

ELECTRICAL

- *Dual 120/277 voltage.*
- *Charge rate/power "ON" LED indicator light and push-to-test switch for mandated code compliance testing.*
- *LVD (low voltage disconnect) prevents battery from deep discharge.*
- *6V maintenance-free, rechargeable Sealed lead acid battery.*
- *Internal solid-state transfer switch automatically connects the internal battery to LED board/lamp heads for minimum 90-minute emergency illumination.*
- *Fully automatic solid-state, two-rate charger initiates battery charging to recharge a discharged battery in 24 hours.*

MOUNTING

- *Mounting hardware provided for back surface wall mount.*
- *Top and side K/Os provided for conduit feed applications.*

HOUSING

- *Durable, powder-coated 20-gauge steel construction in white or black finish.*
- *Injection-molded, engineering-grade, high-impact, thermoplastic heads in white or black finish.*
- *Field removable steel knockout Chevron directional indicators on exit face.*

WARRANTY/LISTING

- *Five year warranty on all electronics and housing. Battery pro-rated for two years.*
- *Meets UL924, NFPA 101 Life Safety Code, NEC, OSHA, Local and State Codes.*
- *UL listed for damp locations. (20°C – 50°C)*

DIMENSIONS

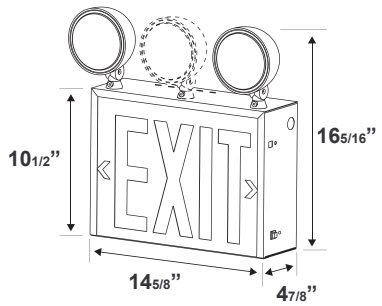

ORDERING INFORMATION

Sample Part Number: ***NYXEM6-1-R-W-3***

Model	No. of faces	Letter	Housing	Heads #
NYXEM6	1 Single Face	R Red	W White	3 Standard
			B Black	NH No Heads

T (817) 468-3591 E info@aelnow.com www.aelnow.com

Specifications subject to change without notice.

NYXEM6

New York Approved LED Exit & Incandescent Emergency Combo

ELECTRICAL INFORMATION

Catalog Number	Input Watts (W)		Input Amps (A)	
	120V	277V	120V	277V
NYXEM6	12.7	14.3	0.115	0.056

CENTER-TO-CENTER SPACING GUIDELINES

For reference only.

UNIT LOCATION
LIGHT SOURCE

	12	11	10	9	8	7	6	5	4	3	2	1	0	1	2	3	4	5	6	7	8	9	10	11	12
1	0.05	0.05	0.06	0.10	0.16	0.15	0.17	0.23	0.43	0.53	0.60	0.59	0.62	0.49	0.55	0.49	0.37	0.27	0.19	0.14	0.12	0.10	0.08	0.05
2	0.04	0.05	0.07	0.11	0.15	0.13	0.18	0.25	0.53	0.61	0.60	0.63	0.72	0.56	0.59	0.61	0.44	0.35	0.22	0.15	0.13	0.10	0.09	0.06
3	0.05	0.05	0.07	0.11	0.13	0.14	0.22	0.59	1.54	1.45	1.35	1.08	0.83	1.49	1.69	1.72	1.20	0.81	0.31	0.17	0.13	0.11	0.10	0.07
4	0.04	0.05	0.08	0.11	0.12	0.15	0.22	1.26	3.19	3.21	3.42	3.66	0.80	2.61	2.89	2.68	1.99	1.52	0.60	0.15	0.12	0.10	0.08	0.08
5	0.04	0.05	0.09	0.11	0.12	0.14	0.19	0.42	0.64	0.63	0.62	0.66	0.52	0.42	0.47	0.44	0.41	0.34	0.20	0.13	0.09	0.09	0.07	0.06
6	0.01	0.07	0.08	0.09	0.11	0.12	0.15	0.25	0.30	0.27	0.27	0.30	0.36	0.24	0.24	0.24	0.22	0.21	0.15	0.13	0.09	0.08	0.08	0.06

Meets NFPA 101 Requirements for: 11' center-to-center spacing - 3' path of egress 2' from wall - 7 1/2' mounting height.