CATALOG #:	
PROJECT:	
TYPE:	DATE:

N2WP LED Wall Pack light

Wattages: 15W,25W

The Wall Pack LED Lighting Series can be widely used for Indoor or Outdoor (Wet Location) Excellent for Museums, Art Galleries, Shopping Malls, Office Buildings, Walls and many other applications.

CCT SELECTABLE

Features:

- Lumileds LED, high luminous efficiency and long working life.
- High efficiency LED Driver, the wide range input voltage AC120-277V.
- Die Cast aluminium cooling design,high quality and better cooling for LED Tj < 85℃.
- Excellent Optics design, greatly improve the light utilization and evenness.
- The 1-10V Dimming type is continuous.

Packaging information:

❖**N2WP-WP015W27-345K:**

Carton Size:545mmX230mmX285mm
21.46”x9.06”x11.22” (12Pcs/CTN)

❖**N2WP-WP025W27-345K**

Carton Size:545mmX230mmX285mm
21.46”x9.06”x11.22” (12Pcs/CTN)

ORDERING EXAMPLE: **N2WP-015-27-345K-D-P**

N2MP					
SERIES	POWER	VOLTAGE	CCT	FINISH	CONTROL
N2WP Wall Pack light	**015** (15W) **025** (25W)	**27** AC120-277V	**345K** 3000K/4000K/5000K	D (Dark Bronze) W (White) B (Black) S (Silvery)	**P** (Photocell)

N2M, LLC
301 E. RISINGER RD., BLDG 109
FORT WORTH, TX 76140

817.468.3591

www.AELnow.com

Specifications subject to change without notice.

CATALOG #:	
PROJECT:	
TYPE:	DATE:

DIMENSION:

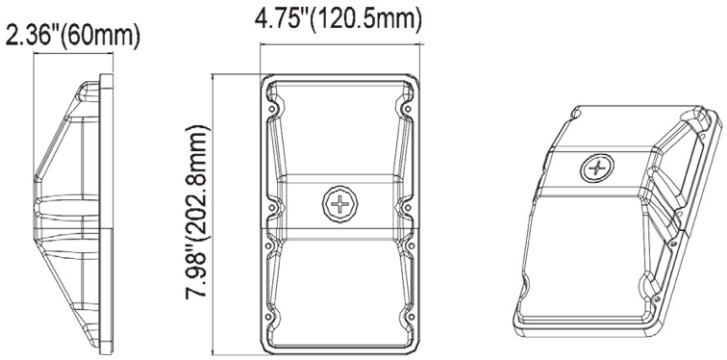

15W/25W

Specifications:

Shell materials: Aluminum & PC.
Net weight : 1.26 lbs
Finish: Dark Bronze(Standard)
Product Size:202.8mmX120.5mmX60mm
7.98”X4.75”X2.36”

Control Module:

The LED Wall Pack light can adjust the color temperature of the whole lamp, which is convenient and fast. The color temperature can be selected according to the actual needs of customers.

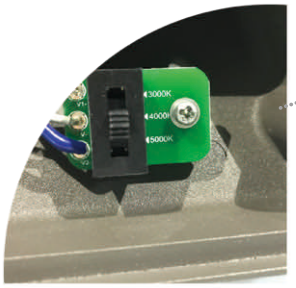

CCT
SELECTABLE

	SPECIFICATION					
WATTAGE	15W			25W		
CCT	3000K	4000K	5000K	3000K	4000K	5000K
LUMEN	2130 lm	2246 lm	2218 lm	3423 lm	3656 lm	3571 lm
EFFICACY	> 150 lm/W					
CRI	> 70					
INPUT VOLTAGE	AC120-277V					
LIGHTING ANGLE	112.4°X105.3°					
FACTORY SETTINGS	4000K					
LED TYPE	2835					
PF	> 0.95					
DRIVER EFFICIENCY	> 89%					
PROTECTION LEVEL	WET					
LIFE TIME	> 50000 hours					
WARRANTY	5 year limited					

N2M, LLC
301 E. RISINGER RD., BLDG 109
FORT WORTH, TX 76140

817.468.3591

www.AELnow.com

Specifications subject to change without notice.

CATALOG #:	
PROJECT:	
TYPE:	DATE:

PHOTOMETRICS:

N2WP-015W (3000K)

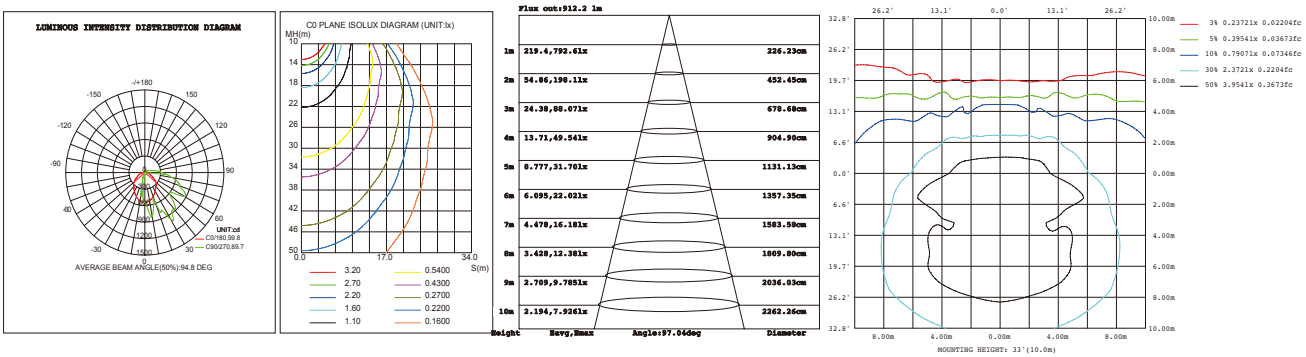

N2WP-025W (3000K)

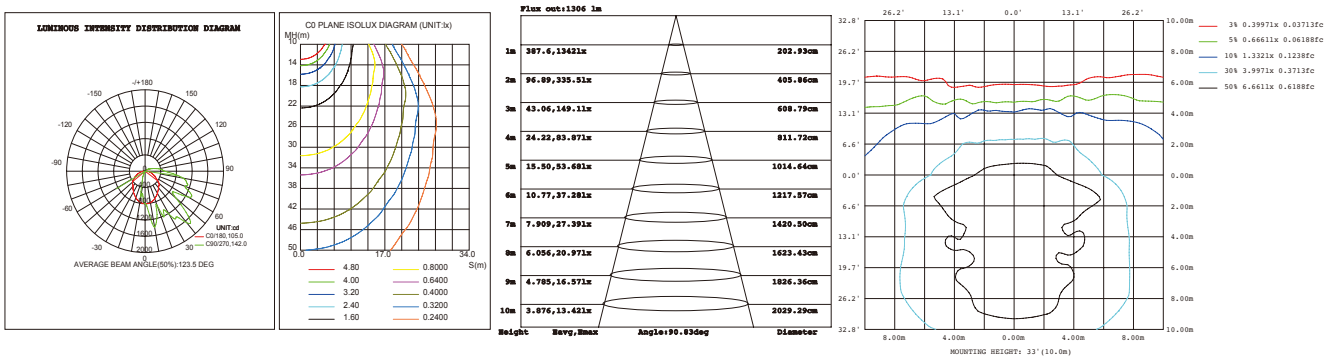

N2M, LLC
301 E. RISINGER RD., BLDG 109
FORT WORTH, TX 76140

817.468.3591

www.AELnow.com

Specifications subject to change without notice.