CATALOG #:	
PROJECT:	
TYPE:	DATE:

N2WS200 200W LED Shoebox

Product Applications

The N2WS200 is an outdoor, wet location area light. Typical applications include general area, parking, flood, security, and accent lighting for retail centers, industrial parks,schools and universities, public transit and airports, office buildings and medical facilities.

Features

- High efficiency LED Driver, the wide range input voltage AC120-277V
- Die Cast aluminium cooling design,high quality and better cooling for LED Tj < 85 .
- Excellent Optics design, greatly improve the light utilization and evenness.

Specifications

Unit : inch(mm)

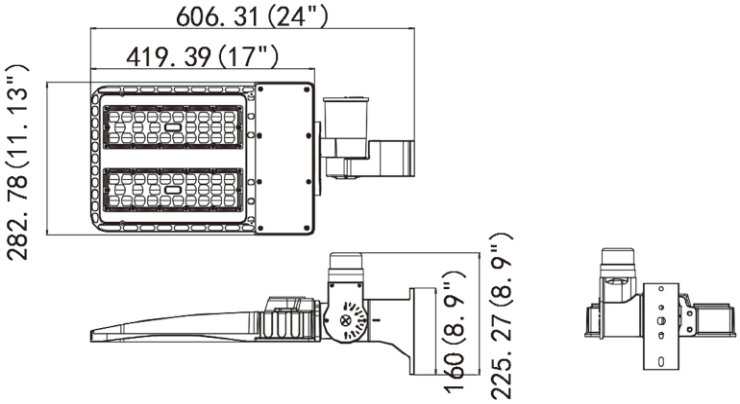

Structure Features

- Housing materials: Aluminum & PC.
- Finish: Dark Bronze
- Net weight：7.5Kg (16.6 lbs)

LUMILEDS The Brighter Choice

c UL us LISTED

5 YEAR

WET LOCATION

ORDERING EXAMPLE: N2WS200-27-50K-A-P

N2WS300				
SERIES	VOLTAGE	CCT	MOUNT	OPTION
N2WS200	**27** (AC120-277V)	**50K -** (5000K)	**A** - Arm **SF** - Slip Fitter	**P -** Photocell

N2M, LLC
301 E. RISINGER RD., BLDG 109
FORT WORTH, TX 76140

817.468.3591

www.AELnow.com

Specifications subject to change without notice.

CATALOG #:	
PROJECT:	
TYPE:	DATE:

N2WS200 200W LED Shoebox

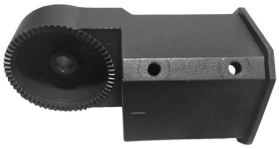

Arm

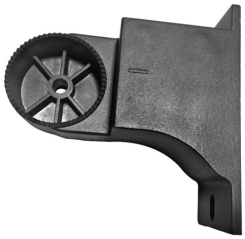

Slip Fitter

N2 WS200			
Power	200W	**Lighting Angle**	Type III
Input Voltage	AC120-277V	**LED Brightness Decay**	<5%/6000 hrs
PF	>0.95	**Working Life**	>50000 hrs
Driver Efficiency	>90%	**Working Temperature**	-30 - +45℃
Lumen Output	27,000LM	**Storage Temperature**	-40 -+80℃
Color Temperature	5000K	**Protection Level**	Wet Location/IP65
CRI	Ra>70	**Cable**	3 core , 18AWG
Optional dimming function	1-10Vdc		

Photometry

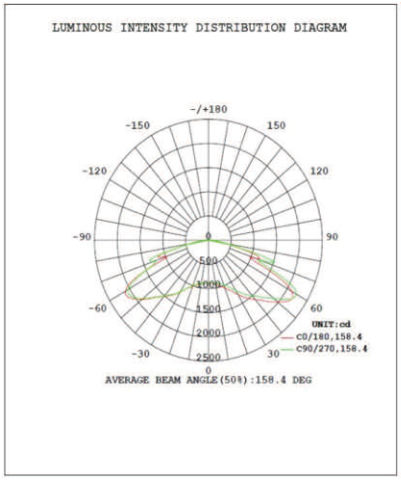

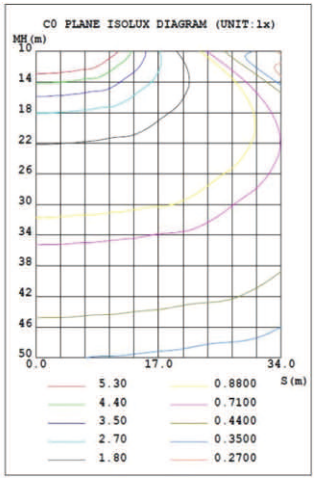

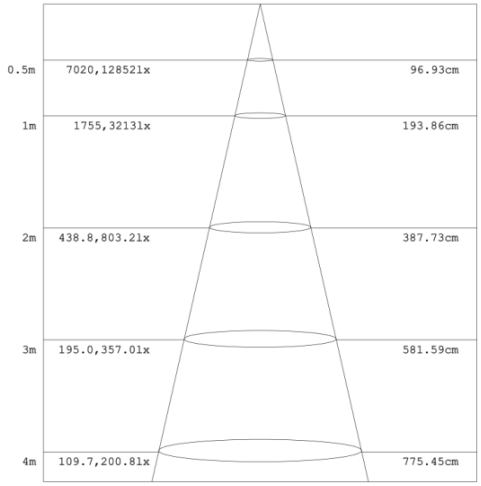

N2M, LLC
301 E. RISINGER RD., BLDG 109
FORT WORTH, TX 76140

817.468.3591

www.AELnow.com

Specifications subject to change without notice.