N2MWFC70

70W Full Cutoff Wall Pack

The N2MWFC70 is a full cutoff wall pack made of die cast aluminum with a polycarbonate lens. Typical wall mounted lighting applications include retail centers, industrial parks, schools and universities, public transit and airports, office buildings and medical facilities.

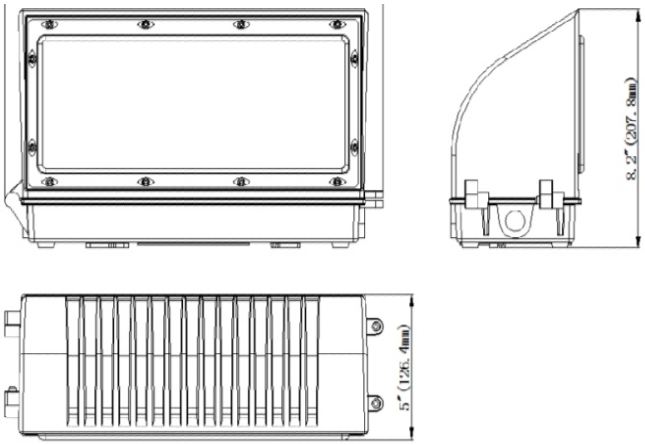

Specifications

- Materials: Aluminum & PC.
- Finish: Dark Bronze
- Net weight : 2.9Kg (6.4 lbs)
- Product Size:354.8mm*207.8mm*126.4mm

Technical Parameters

Power	70W	Lighting Angle	62°x118°
Input Voltage	AC120-277V	LED Brightness Decay	<5%/6000 hrs
PF	>0.95	Working Life	>50000 hrs
Driver Efficiency	>90%	Working Temperature	-30 - +45℃
Luminous Flux	8400 Lm	Storage Temperature	-40 -+80℃
Color Temperature	5000K	Protection Level	Wet Location/IP65
CRI	Ra>70	Cable	Input Connect, No cable

ORDER INFORMATION EXAMPLE: N2MWFC7050K

Model	CCT	Options
N2MWFC70	**50K**(5000K)	**PC** Photocell

Specifications subject to change without notice.

N2M, LLC
301 E. Risinger Rd, Bldg 109
Fort Worth, TX 76140

T: (318)366-2270
E: holly@n2mled.com
www.n2mled.com

N2MWFC70

70W Full Cutoff Wall Pack

Photometrics

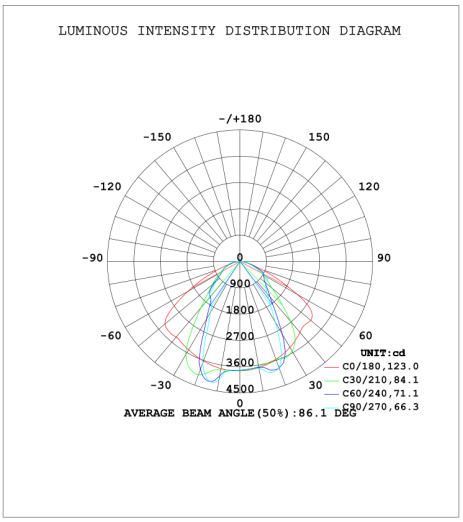

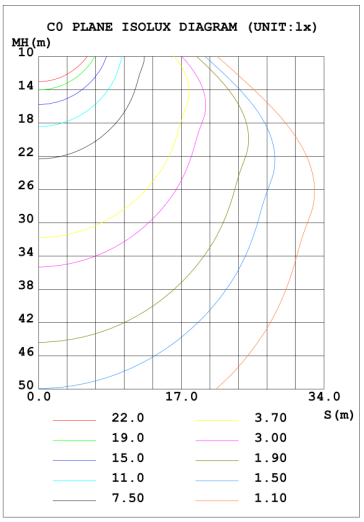

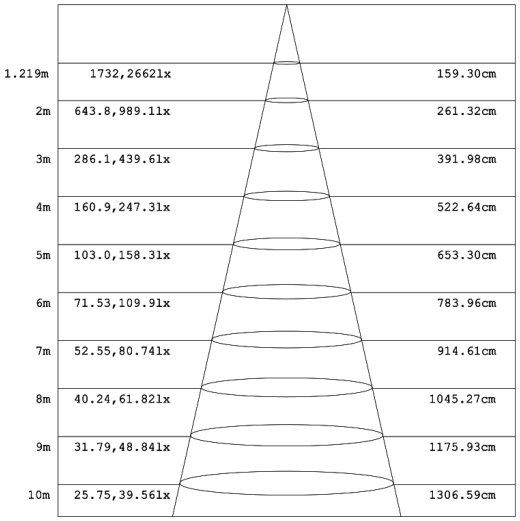

N2M, LLC
301 E. Risinger Rd, Bldg 109
Fort Worth, TX 76140

T: (318)366-2270
E: holly@n2mled.com
www.n2mled.com