Advantage Environmental Lighting

MEDICO

Catalog Number	
Project	
Type	

MWHB

Wash Down LED High Bay Luminaire

NSF

IP67 CERTIFIED

IP66 CERTIFIED

PRODUCT SPECIFICATIONS

DESCRIPTION

The MWHB Series is an IP Rated Wash Down LED High Bay luminaire. It boasts a gasketed enclosure that is completely dust and moisture resistant. The MWHB utilizes state-of-the-art LED technology to deliver the highest possible efficiency in the lighting industry.

APPLICATIONS

The MWHB Series of Wash Down LED High Bays were designed to be high quality, energy efficient fixtures for use in food processing facilities, kitchens, parking garages, canopy, stairwells, car washes, government facilities, schools, public areas and industrial facilities. Suitable for both indoor and outdoor applications.

CONSTRUCTION

The fixture is constructed of a single-piece polycarbonate upper body and an acrylic diffuser securely positioned with a permanent, poured-in-place; polyurethane sealing gasket. The diffuser and upper components are locked in place and sealed tightly with tamper-resistant stainless steel retaining latches. High impact acrylic/DR material diffuser composition.

OPTICAL SYSTEM

White polyester polymer finish with a minimum 93% reflectivity. Miro 4 reflector available.

ELECTRICAL SYSTEM

Electronic drivers are available for 120/277V applications. Long-life LED system rated for >50K life hours (L70 @ 25Â°C). Metal gear tray for internal LED driver. Complies with federal energy efficiency standards. 0-10 dimming standard.

MOUNTING

The fixture can be suspended or surface mounted. Utilizes off the shelf 1/2" fittings.

LISTINGS

CSA approved. NSF International Certified. IP66 and IP67 Certified for Wet Location applications. NEMA 4X.

WARRANTY

5-Year Limited Warranty. Complete warranty and terms located at www.aelnow.com/warranty.

ORDERING INFORMATION

Example: MWHB40SMCM

SERIES	COLOR TEMP	OUTPUT	REFLECTOR	LENS OPTIONS	VOLTAGE	EMERGENCY OPTIONS	HANGING OPTIONS	SENSOR OPTIONS
MWHB	**30** 3000K **35** 3500K **40** 4000K **50** 5000K	**S** Standard **M** Medium **H** High ** See below	**(Blank)** None **M** Miro	**C** Clear **F** Frosted	**M** Multi-Volt (120-277VAC)	**12EBL** 1200 Lumen Emergency	**SMH** Surface Mount **AFH** "A" Frame	**WS** Wet Sensor

*** For specific lumen outputs, please place the specific lumens desired at the end of the part# . For Example: LWHB40MCM11000. Contact factory for approval, if lumens exceed 30% of High (H) Output.*

Advantage Environmental Lighting

MWHB

Wash Down LED High Bay Luminaire

FIXTURE DIMENSIONS

TOP VIEW

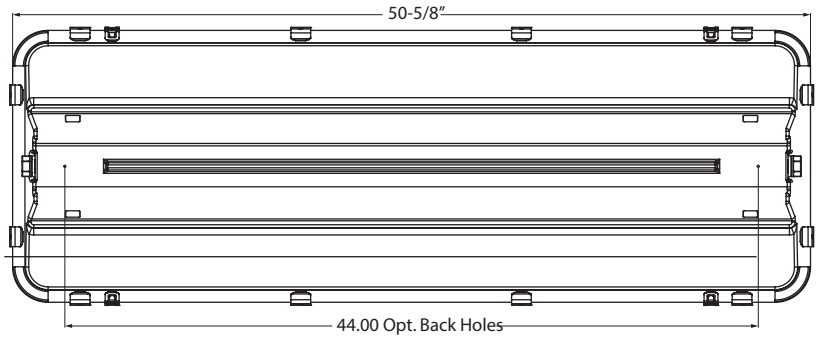

SIDE VIEW

END VIEW

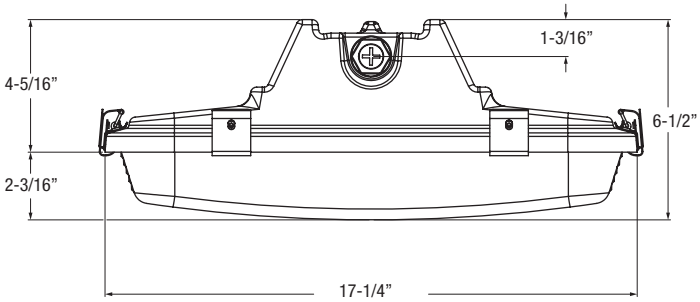

ENERGY AND PERFORMANCE DATA

Input Voltage	120/277VAC
System Input Power	32, 40, and 60 Watts*
Delivered Lumen Output per ft	7,881- 20,000 Lumens
Standard Dimming Control	0-10V
CCT	3000, 3500, 4000, 5000 Kelvin
CRI	82 (minimum)
Life Time Rating	50,000 hrs @ L70
Input Frequency	50/60 Hz
Power Factor	>0.9
Operating Temp	30° to 50° C

*Actual wattage may differ by ±5% while operating 120/277V ±10%

LED SYSTEM DATA

Output	Delivered Lumens	System Wattage	L70 @ 25°C (hrs)	Amperage Draw	
				120V	277V
Standard	7881	60	>50K	.50A	.22A
Medium	15500	118	>50K	.98A	.43A
High	20000	153	>50K	1.28A	.55A