Advantage Environmental Lighting

MEDICO

Catalog Number	
Project	
Type	

MSWV07

LED Stairwell Luminaire

Occupancy Sensor

PRODUCT SPECIFICATIONS

DESCRIPTION

The MSWV07 Series is a Stairwell LED Luminaire with an occupancy sensor and smooth white acrylic diffuser.

APPLICATIONS

The MSWV07 Series of LED Stairwell fixtures are designed to be high quality, energy efficient LED fixtures for use in corridors, stairwells, etc.

CONSTRUCTION

The fixture is constructed of a structurally embossed, heavy gauge, cold rolled steel. White finish with powder coated white ends.

OPTICAL SYSTEM

High output LED's available in 3000K, 3500K, 4000K, and 5000K. White pre-painted polyester polymer finish with a high reflectivity

ELECTRICAL SYSTEM

Electronic drivers are available for 120/277V applications. Long-life LED system rated for >100K life hours (L70 @ 25°C). Metal gear tray for internal LED driver. Complies with federal energy efficiency standards.

MOUNTING

The MSWV07 Series is designed for surface mounting on either a wall or ceiling.

LISTINGS

Designed for damp locations.

WARRANTY

5-Year Limited Warranty. Complete warranty and terms located at www.aelnow.com/warranty.

ORDERING INFORMATION

Example: MSWV0740SSWMW4

SERIES	COLOR TEMP UP		OUTPUT		DIFFUSER		VOLTAGE		FINISH		LENGTH		OPTIONS	
MSWV07	**30**	3000K	**SL**	Standard Low	**SW**	Smooth White	**M**	Multi-Volt (120-277VAC)	**W**	White	**2**	2FT	**12EBL**	1200 Lumen Emergency
	35	3500K	**ML**	Medium Low					**SP**	Custom	**n**	nFT	**BL**	Bi-Level Occupancy Sensor
	40	4000K	**HL**	High Low									**90CRI**	High CRI
	50	5000K	**SM**	Standard Medium										
			MM	Medium Medium										
			HM	High Medium										
			SH	Standard High										
			MH	Medium High										
			HH	High High										

ENERGY AND PERFORMANCE DATA

Input Voltage	120/277VAC
System Input Power	32, 40, or 60 Watts*
Delivered Lumen Output	3942 - 7884 Lumens
Standard Dimming Control	0-10V
CCT	3000, 3500, 4000, 5000 Kelvin
CRI	82 (minimum)
Life Time Rating	100,000 hrs @ L70
Input Frequency	50/60 Hz
Power Factor	>0.9
Operating Temp	30° to 50° C

*Actual wattage may differ by ±5% while operating 120/277V ±10%

Output	Delivered Lumens	System Wattage	L70 @20C (hrs)
SL	4650	33	>100K
ML	7974	57	>100K
HL	11150	80	>100K
SM	12040	86	>100K
MM	13016	93	>100K
HM	15728	112	>100K
SH	16500	118	>100K
MH	20000	143	>100K
HH	25000	179	>100K

FIXTURE DIMENSIONS

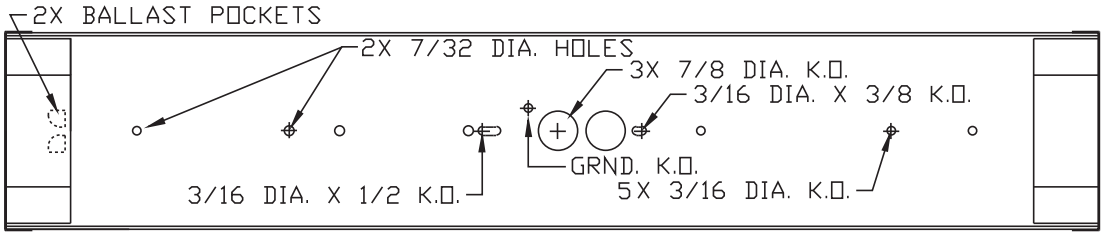

TOP

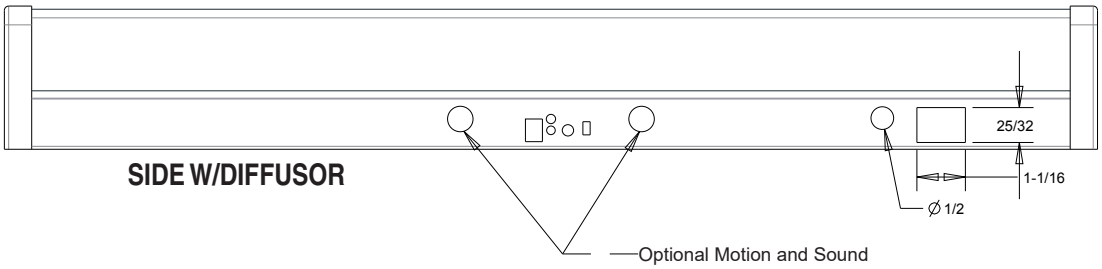

SIDE W/DIFFUSOR

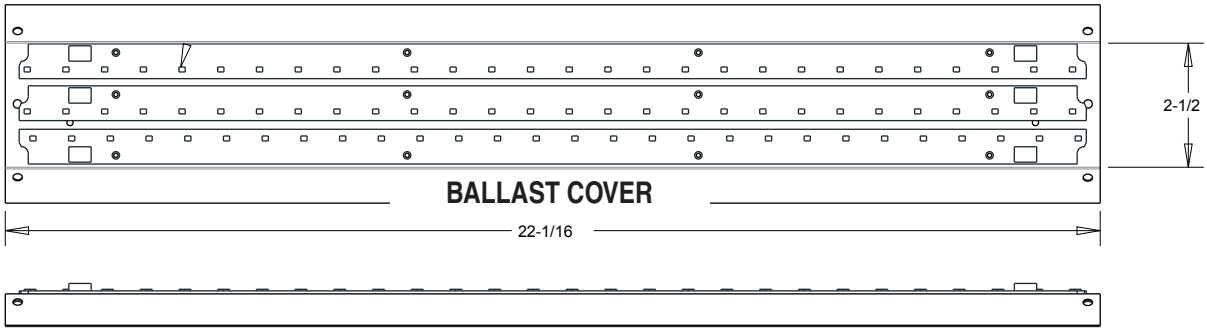

BALLAST COVER

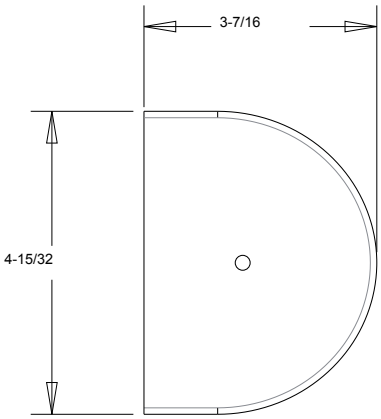

END

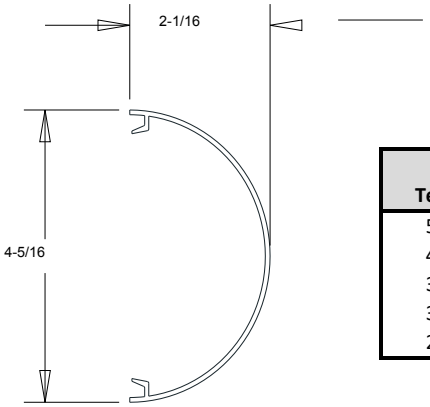

DIFFUSOR

Approximate Color Temperature Multiplier	
5000K	1.03
4000K	1
3500K	0.97
3000K	0.94
2700K	0.91