ADVANTAGE ENVIRONMENTAL LIGHTING

MADE IN THE USA

CATALOG #:

PROJECT:

TYPE:

MEU BEHAVIORAL HEALTH LED LINEAR RECESSED MUD FLANGE

MEDICO MEDICAL GRADE

NEW Advantage Tune Available*

The **MEU** is an ligature resistant, vandal proof LED linear light designed for Behavioral Health facilities. The MEU was designed for behavioral health applications that need a LED linear fixture, with a ligature resistant and vandal proof design.

CONSTRUCTION: Constructed of heavy gauge steel, featuring a gasketed and sealed inset doorframe. Torx head tamper proof screws standard. Inner satin lens with high impact clear polycarbonate outer lens. Available with multiple finish options.

ELECTRICAL SYSTEM: Electronic, standard 0-10V, 1% dimming driver. Long-life LED system rated for >100K hours (L70 @ 50°C). Complies with federal energy efficiency standards. 80 CRI or 90 CRI LEDs available in 2700K, 3000K, 3500K, 4000K and 5000K.

OPTICAL SYSTEM: High output LED's available in 2700K, 3000K, 3500K, 4000K, and 5000K. CRI >82 with 90 CRI available. Inner satin lens with high impact clear polycarbonate outer lens provides for a vandal proof fixture, while maintaining optimal light output.

MOUNTING: Mounts into drywall ceilings via mud flange.

LISTINGS: Independently tested to IESNA LM-79 and LM-80 specifications. ETL and cETL listed. IP65 rated. Manufactured in the USA, BAA compliant.

WARRANTY: 5-Year Limited Warranty. Complete warranty and terms located at **www.aelnow.com/warranty**.

Ordering Information on Next Page

ADVANTAGE ENVIRONMENTAL LIGHTING

CATALOG #:

PROJECT:

TYPE:

ORDERING INFORMATION

Example: MEU-30-4L-M-W-4-14EBL

SERIES	SIZE	CCT	ILLUMINATION LEVEL	VOLTAGE	FINISH	OPTIONS	OPTIONS
MET	4 4 feet	27 2700K	4L 4000 Lumens (Standard Low)	M Multi-Volt (120-277VAC)	W White	2TW1 2 Channel 0-10v Tunable White 1% Dimming Driver*	14EBL 14 Watt Emergency Ballast
	8 8 feet	30 3000K	7L 7000 Lumens (Medium Low)	HV 347-480VAC	SP Special	2TWCS 2 Channel 0-10v Tunable White Dimming Driver Compatible with Casambi**	90 90 CRI
	XX CUSTOM	35 3500K	11L 11000 Lumens (High Low)				
		40 4000K	12L 12000 Lumens (Standard Medium)				
		50 5000K	XX Custom Lumens				
		ATTW Tunable White					

*Prewired with Tunable White LED boards and (2) 0-10v drivers installed
**Prewired with Tunable White LED boards and Casambi ready fixture control

Other options and configurations are available. Consult factory for details.

Dimensions on Next Page

ENERGY AND PERFORMANCE DATA

INPUT VOLTAGE:	120/277VAC
SYSTEM INPUT POWER:	27.8 - 173.4 WATTS*
DELIVERED LUMEN OUTPUT:	4000 - 25000 LUMENS
STANDARD DIMMING CONTROL:	0-10V
CCT:	3000, 3500, 4000, 5000 KELVIN
CRI:	82 (MINIMUM)
LIFE TIME RATING:	>100,000 HRS @ L70
INPUT FREQUENCY:	50/60 HZ
POWER FACTOR:	>0.9
OPERATING TEMP:	-30° TO 50° C

*ACTUAL WATTAGE MAY DIFFER BY ±5% WHILE OPERATING 120/277V ±10%

APPROXIMATE COLOR TEMPERATURE MULTIPLIER

5000K	X	1.03
4000K	X	1
3500K	X	.97
3000K	X	.94
2700K	X	.91

PART#	DELIVERED LUMENS	WATTS	L70 @20C (HRS)
4L	4000 LUMENS	27.8	>100K
7L	7000 LUMENS	48.5	>100K
11L	11000 LUMENS	79.3	>100K
12L	12000 LUMENS	83.2	>100K
13L	13000 LUMENS	90.1	>100K
15L	15000 LUMENS	104	>100K
16L	16000 LUMENS	110.1	>100K
20L	20000 LUMENS	138.7	>100K
25L	25000 LUMENS	173.4	>100K

ADVANTAGE ENVIRONMENTAL LIGHTING

CATALOG #:

PROJECT:

TYPE:

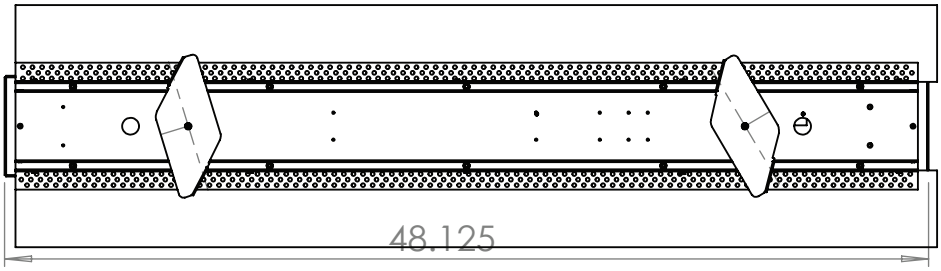

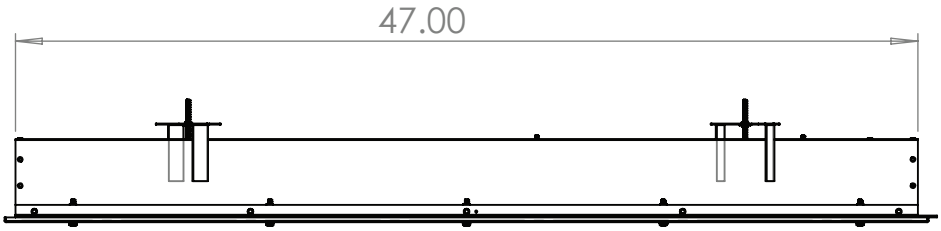

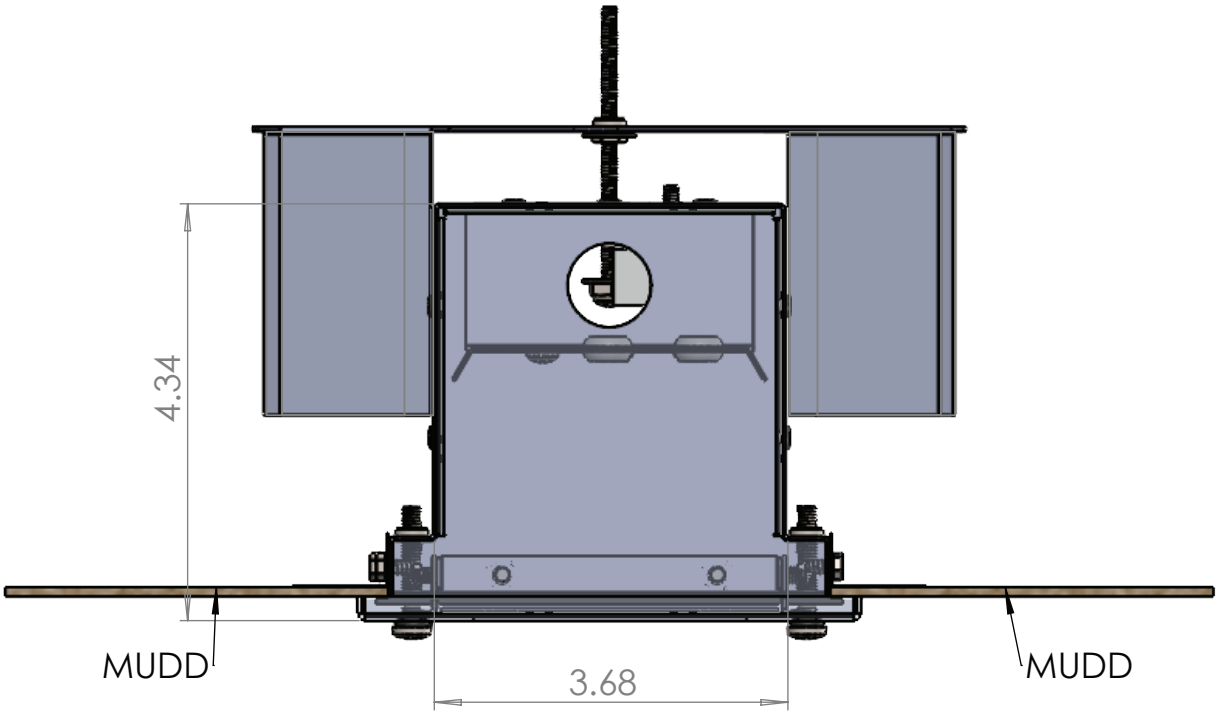

CUT OUT WIDTH 4 15/16"

CUT OUT LENGTH 47 1/4"