MEDICO

Advantage. Environmental Lighting

Catalog Number	
Project	
Type	

MEQMRI

Recessed MRI/Imaging Suite

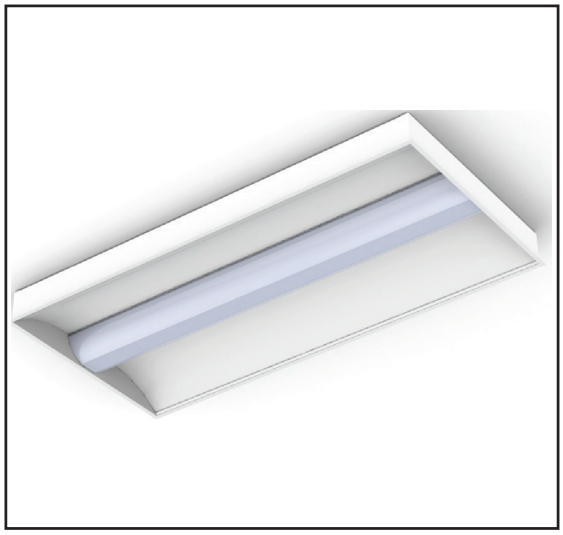

DESCRIPTION

The MEQMRI Is a recessed luminaire designed for use in MRI rooms and imaging suites. Sleek design and non-ferrous construction make the fixture safe for use around MRI equipment.

ELECTRICAL SYSTEM

Long-life LED system rated for >100K hours (L70 @ 45°C). 80 CRI or 90 CRI LEDs available in 2700K, 3000K, 3500K, 4000K and 5000K. Complies with federal energy efficiency standards. Remote mounted power supply available with up to 9 dimming drivers.

CONSTRUCTION

Non-Ferrous aluminum construction. Matte white powdercoat finish.

OPTICAL SYSTEM

Frosted acrylic lens provides excellent light output.

LISTINGS

NSF2 rated (Non-Food, Splash Zone). UL and cUL listed. Made in the USA.

MOUNTING

Recessed Grid mounting.

WARRANTY

5 - Year Limited Warranty. Complete warranty and terms located at: www.aelnow.com/warranty

Ordering Information

Example: MEQMRI24-40-ML-FZ

Series		CCT		Illumination Level		Options	
MEQMRI22	2x2	**27**	2700K	**SL**	Standard Low	**FZ**	Fuse & Holder
MEQMRI24	2x4	**30**	3000K	**ML**	Medium Low	**90**	90 CRI
		35	3500K	**HL**	High Low		
		40	4000K	**SM**	Standard Medium		
		50	5000K	**MM**	Medium Medium		
				HM	High Medium		
				SH	Standard High		
				MH	Medium High		
				HH	High High		

Remote Mounted Power Supply Ordering Information

Series		# of Drivers		Voltage		Options	
MEQMRI-RMB	Fits up to 9 Drivers	**D4**	4 LED Drivers 1% Dimming Drivers	**M**	Multi-Volt	**AM**	Anti-Microbial Paint
		D5	5 LED Drivers 1% Dimming Drivers			**XEMIF**	EMI Filters (Replace X with # of drivers
		D6	6 LED Drivers 1% Dimming Drivers			**XDIMF**	Dimming Filter (Replace X with # of dimming circuits)
		D7	7 LED Drivers 1% Dimming Drivers				
		D8	8 LED Drivers 1% Dimming Drivers				
		D9	9 LED Drivers 1% Dimming Drivers				

Approximate Color Temperature Multiplier	
5000K	1.03
4000K	1
3500K	0.97
3000K	0.94
2700K	0.91

Output	Delivered Lumens	System Wattage	L70 @20C (hrs)
SL	4650	33	>100K
ML	7974	57	>100K
HL	11150	80	>100K
SM	12040	86	>100K
MM	13016	93	>100K
HM	15728	112	>100K
SH	16500	118	>100K
MH	20000	143	>100K
HH	25000	179	>100K

FIXTURE DIMENSIONS

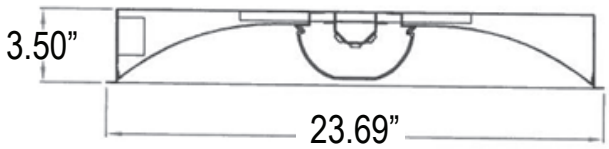

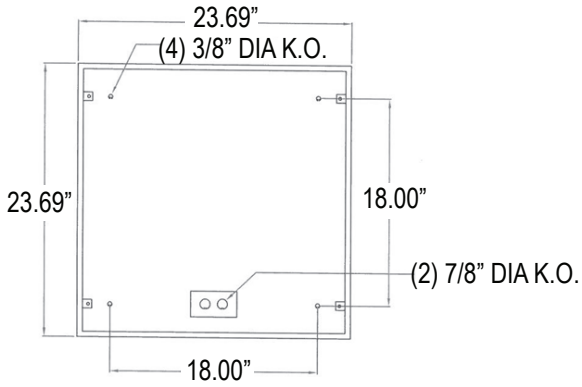

MEQ22 Backview

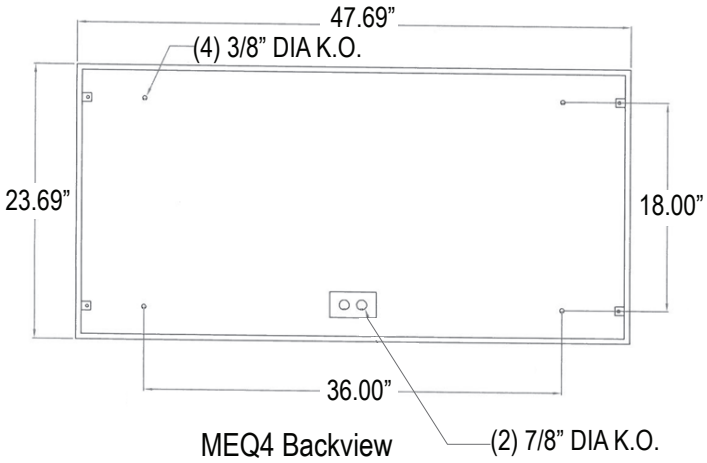

MEQ4 Backview