MEDICO

Advantage. Environmental Lighting

Catalog Number	
Project	
Type	

MEN

Corner Surface Mount LED Luminaire

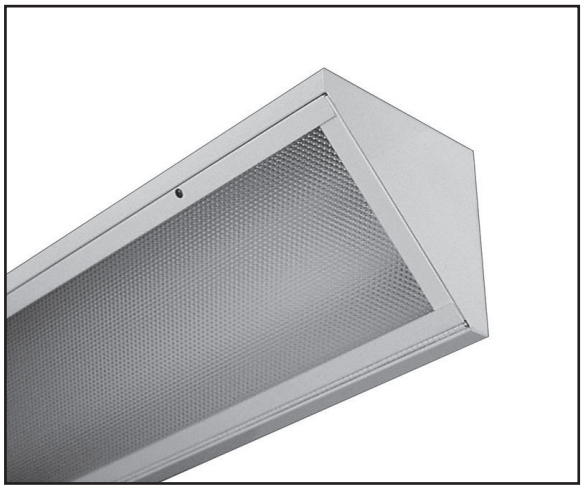

STANDARD	OPTIONAL
UL, Proudly Made in USA	LUTRON, WET location

PRODUCT SPECIFICATIONS

DESCRIPTION
The MEN Series is an architecturally designed corner mount LED fixture. It is available for continuous run mounting. The MEN utilizes the latest in LED technology to deliver the high efficacy and long life-span. The MEN is best used in health care, labs, nursing centers or any other medical facilities.

APPLICATIONS
The MEN is perfect for healthcare applications requiring additional supplemental light in an aesthetically pleasing corner mount luminaire.

CONSTRUCTION
Choice of cold roll steel or stainless steel. If additional options are needed, consult with factory. Antimicrobial paint available.

OPTICAL SYSTEM
Various lens options available. If additional options are needed, consult factory. Optics provide optimal downward throw.

ELECTRICAL SYSTEM
Electronic drivers are available for 120/277V applications. Long-life LED system rated for >120K life hours (L70 @ 25°C). Metal gear tray for internal LED driver. Complies with federal energy efficiency standards. Consult factory for special tuning to achieve specific lumen outputs.

MOUNTING
This fixture is designed for corner / wall / ceiling mounting, where the wall and ceiling meet.

LISTINGS
Independently tested to IESNA LM-79 and LM-80 specifications. **ET**L and c**ET**L Listed. Damp location rated.

WARRANTY
5-Year Limited Warranty. Complete warranty and terms located at www.aelnow.com/warranty

ORDERING INFORMATION
Example:MEN440ML125CB18MW

SERIES	BODY LENGTH (FT)		COLOR TEMP		ILLUMINATION LEVEL		LENS		HOUSING	
MEN	4	4'	30	3000K	4L	4000 Lumens	125C	.125 Prismatic Acrylic	B18	18 Gauge Cold Roll Steel
	8	8'	35	3500K	7L	7000 Lumens	CP25	.125 Prismatic Polycarbonate	B20	20 Gauge Cold Roll Steel
	XX	Length in FT	40	4000K	11L	11000 Lumens	CP87	. 187 Prismatic Polycarbonate	SH14	18 Gauge Stainless Steel
			50	5000K	12L	12000 Lumens	TG	. 156 Prismatic Tempered Glass	SH16	20 Gauge Stainless Steel
					13L	13000 Lumens	156C	.156 Prismatic Acrylic		
					15L	15000 Lumens				
					16L	16000 Lumens				
					20L	20000 Lumens				
					25L	25000 Lumens				

DRIVER		VOLTAGE		FINISH		OPTIONS	
BLANK*	0-10V Dimming Driver (included standard)	M	120/277V	W	White	12EBL	1200 Lumen Emergency Ballast
CD1	0-10V 1% to Off Dimming Driver			SP	Custom	EC	Emergency Circuit
CD5	0-10V 5% to Off Dimming Driver			AM	Antimicrobial Paint	WL	Wet Location
EDN	Electronic Driver Non-Dimming						
FLDD	Fifth Light Dali, Dimming						
LDE1	Lutron Hi-lume 1% EcoSystem LED driver with Soft-on, Fade-to-Black dimming technology						
LDE5	Lutron LDE5 5-Series Ecosystem 5% Dimming						

FIXTURE DIMENSIONS

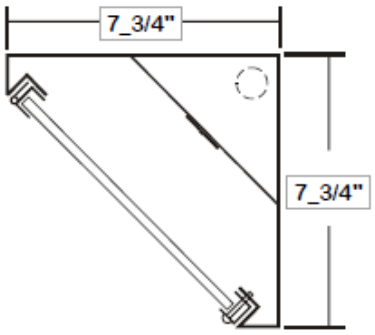

Part#	Delivered Lumens	Watts	L70 @20C (hrs)
4L	4000 Lumens	XX	>100K
7L	7000 Lumens	XX	>100K
11L	11000 Lumens	XX	>100K
12L	12000 Lumens	XX	>100K
13L	13000 Lumens	XX	>100K
15L	15000 Lumens	XX	>100K
16L	16000 Lumens	XX	>100K
20L	20000 Lumens	XX	>100K
25L	25000 Lumens	XX	>100K

Delivered Lumens shown were tested with 4000K LEDs

Approximate Color Temperature Multiplier	
5000K	1.03
4000K	1
3500K	0.97
3000K	0.94
2700K	0.91