MEDICO

Advantage. Environmental Lighting

Catalog Number	
Project	
Type	

MEL

LED Wall Mount Behavioral Healthcare

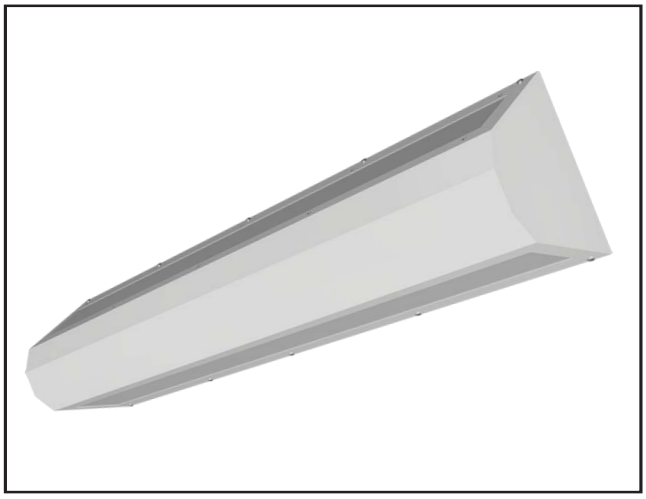

STANDARD	OPTIONAL
UL, Proudly Made in USA	LUTRON

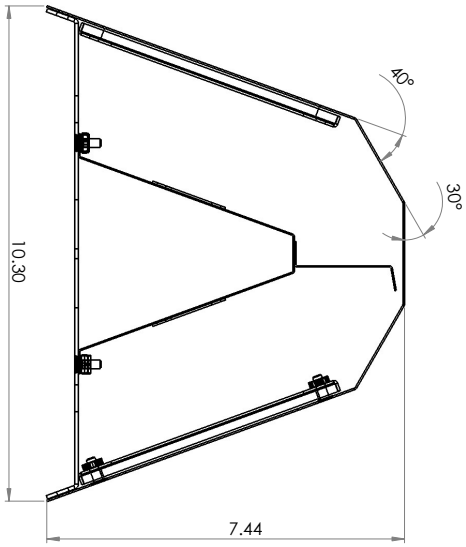

SPECIFICATIONS

DESCRIPTION

The MEL LED wall mount is a durable direct/indirect behavioral healthcare fixture. The MEL utilizes one piece clamshell housing with various inner and outer lens options to provide for a stylish and efficient fixture, while providing tamper and impact resistance. Utilizing the latest in LED technology, the MEL was engineered to be a durable, long lasting, high efficiency fixture. Ideal for use in any behavioral healthcare facility area.

ELECTRICAL SYSTEM

0-10V 1% Dimming Drivers included standard. Long-life LED system rated for >100K life hours (L70 @ 25°C). Complies with federal energy efficiency standards. 2 circuits/LED drivers included standard with up and down distributions.

OPTICAL SYSTEM

Various choices of inner and outer lenses. If additional lens options are required, consult factory.

LISTINGS

UL listed for damp locations. Wet location optional.

FINISH

High gloss, electrostatically applied, white powder coat finish, average minimum reflectance 92%. Anti-microbial paint optional.

HOUSING

Clamshell design combines die-formed 18 gauge steel body with continuous welded and ground ends to form a one-piece, seamless, doorless housing. This housing is designed to be durable and long-lasting to meet the needs of healthcare lighting. Anti-ligature design with sloped edges. Tamper-proof fasteners.

LED

80 CRI or 90 CRI LEDs available in 2700K, 3000K, 3500K, 4000K and 5000K. Life is >100,000 hours at 70% lumen maintenance.

BACKPLATE

Die-formed heavy gauge steel backplate.

WARRANTY

5 - Year Limited Warranty. Complete warranty and terms located at: www.aelnow.com/warranty

Output	Delivered Lumens	System Wattage	L70 @20C (hrs)
SL	4650	33	>100K
ML	7974	57	>100K
HL	11150	80	>100K
SM	12040	86	>100K
MM	13016	93	>100K
HM	15728	112	>100K

* Delivered Lumens shown were tested with 4000K LEDs and ASR (asymmetric/symmetric grid) lens.

Approximate Color Temperature Multiplier	
5000K	1.03
4000K	1
3500K	0.97
3000K	0.94
2700K	0.91

Advantage.
Environmental Lighting

Catalog Number	
Project	
Type	

ORDERING INFORMATION

Example: MEL4-SL-40-50/50-PA125-M-1
Custom Lumen Output Example: MEL4-SL-40-50/50-PA125-M-1-6000 for 6000 lumens

SERIES		ILLUMINATION LEVEL		CCT		UP/DOWN DISTRIBUTION		INNER LENS		OUTER LENS	
MEL2	**2'**	**SL**	Standard Low	**27**	2700K	**0/100**	0% Up/100% Down	**PA125**	.125 Prismatic Acrylic	**125P**	.125 Clear Polycarbonate
MEL3	**3'**	**ML**	Medium Low	**30**	3000K	**10/90**	10% Up/90% Down	**PA156**	.156 Prismatic Acrylic	**187P**	.187 Clear Polycarbonate
MEL4	**4'**	**HL**	High Low	**35**	3500K	**20/80**	20% Up/80% Down	**PP125**	.125 Prismatic Polycarbonate	**250P**	.250 Clear Polycarbonate
		SM	Standard Medium	**40**	4000K	**30/70**	30% Up/70% Down	**PP156**	.156 Prismatic Polycarbonate		
		MM	Medium Medium	**50**	5000K	**40/60**	40% Up/60% Down	**PP187**	.187 Prismatic Polycarbonate		
		HM	High Medium			**50/50**	50% Up/50% Down	**FA**	.125 Frosted Acrylic		
						60/40	60% Up/40% Down				
						70/30	70% Up/30% Down				
						80/20	80% Up/20% Down				
						90/10	90% Up/10% Down				
						100/0	100% Up/0% Down				

DRIVER		VOLTAGE		CIRCUITS		OPTIONS	
BLANK*	0-10V 1% Dimming Driver (included standard)	**M**	120/277V	**1**	1 Circuit	**12EBL**	12W Emergency Driver
CD5	0-10V 5% to off Dimming Driver			**2**	2 Circuits	**AM**	Anti-microbial Matte White Paint
EDN	Electronic Driver Non-Dimming					**NTP**	Non-Tamper Proof Fasteners
FLDD	Fifth Light Dali, Dimming					**LN**	LED Night Light
LDE1	Lutron Hi-lume 1% EcoSystem LED driver with Soft-on, Fade-to-Black dimming technology					**FZ**	Fuse Holder
						90	90 CRI
LDE5	Lutron LDE5 5-Series Ecosystem 5% Dimming					**WL**	Wet Location
						VDO	Lutron Vive integral fixture controller (RF with daylight and occupancy sensing)
						FCJS0	Lutron Vive attached RF controller for 0-10V drivers

MOUNTING DIMENSIONS

MEL4

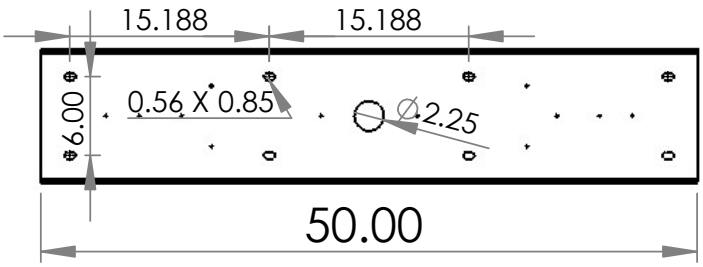
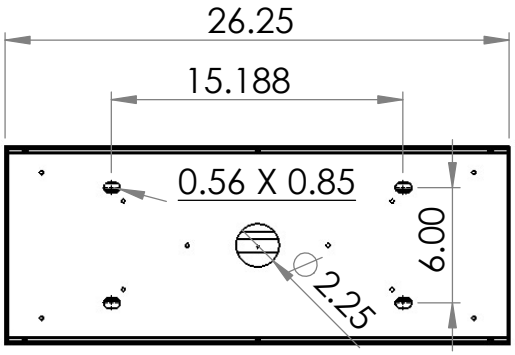
MEL2