MBHDLRGBW

RGBW Behavioral Health Linear Luminaire

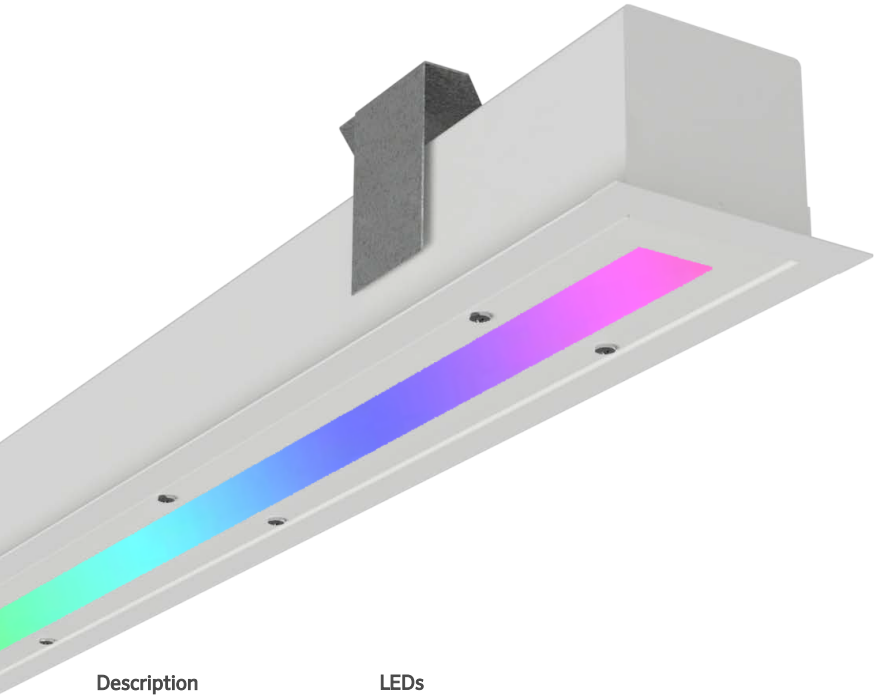

PROJECT

CATALOG #

TYPE

Highlights

- Ligature resistant[1]
- High efficacy and lifespan LEDs
- Sheetrock/Drywall Installation
- High abuse lens/frame
- IP65, Sealed/Gasketed

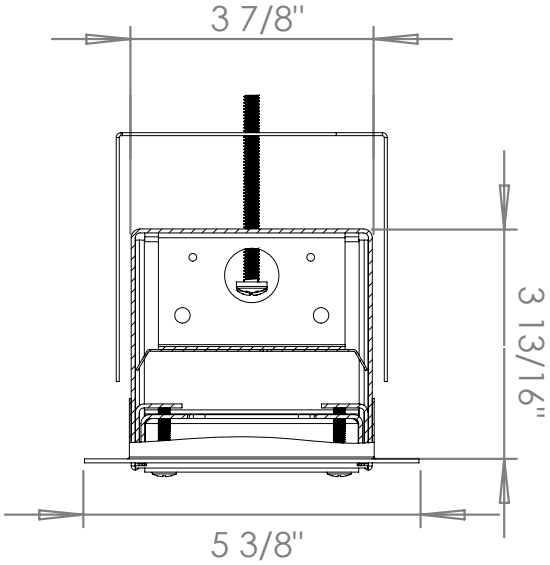

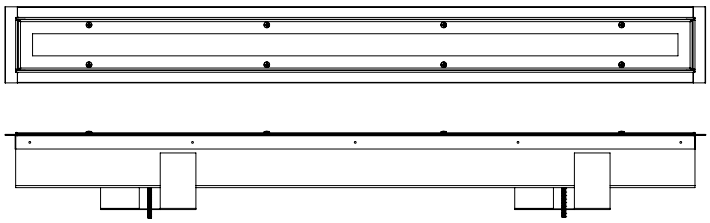

Description
The MBHDLRGBW is a recessed flanged high abuse luminaire, designed for behavioral healthcare applications. Sealed and gasketed, the MBHDL provides an IP65 rating.

Construction
Constructed of .063" aluminum with an alumium mud-flange and frame. Torx head with center-pin fasteners included standard.

Ligature Resistance
Provides ligature resistance when installed in sheetrock/drywall utilizing a tamper-proof security sealant/pick-proof security caulk.

Mounting
Suitable for sheetrock/drywall installation. Recessed housing, conduit entry.

LEDs
High Output RGBW LEDs. White color temperature available in 2700K, 3000K, 3500K, 4000K, and 5000K color temperatures. Integral LEDs are rated for at least 100K life hours (L70).

Optics
High impact clear polycarbonate lens provides impact resistance, while satin inner lens offers excellent LED diffusion and light output.

DMX
DMX512 internal decoder. Constant voltage LED driver. DMX controller supplied by others

Finish
Matte white finish standard. Custom finish options are available in various RAL colors.

Listings
ETL/cETL listed. Manufactured in the USA, BAA compliant.

[1]Ligature resistant when tamper resistant security prison caulking is used (supplied by others)

MBHDLRGBW

RGBW Behavioral Health Linear Luminaire

ORDERING INFORMATION

Example: MBHDLRGBW-40-5L-M-W-4-DMX
With options: MBHDLRGBW-40-5L-M-W-4-DMX-90

Fixture	White CCT	Output	Voltage	Finish	Length	RGBW
MBHDLRGBW	■ **27** *2700K*	■ **5L** *500 Lm/Ft*	■ **M** *Multi-Volt (120-277V)*	■ **W** *Matte White*	■ **4** *4 ft*	■ **DMX** *Internal DMX512 Decoder*
	■ **30** *3000K*	■ **7L** *700 Lm/Ft*		■ **SP** *Special Finish*	■ **6** *6 ft*	
	■ **35** *3500K*	■ **10L** *1000 Lm/Ft*			■ **8** *8 ft*	
	■ **40** *4000K*	■ **14L** *1400 Lm/Ft*				
	■ **50** *5000K*	■ **XXXXL** *XXXX Lm/Ft*				

Options: Add to end of part number

Options
■ **90** *90 CRI*

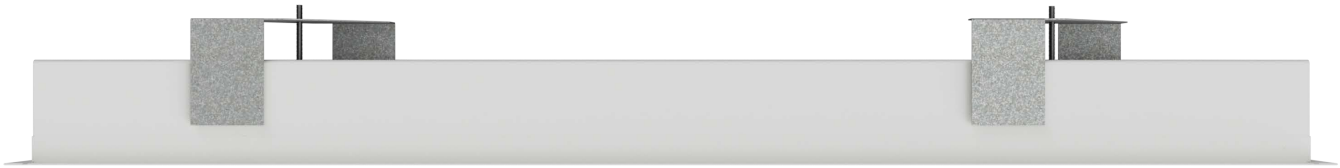

MBHDLRGBW

RGBW Behavioral Health Linear Luminaire

SPECIFICATIONS

White LED Information

Output	5L	7L	10L	14L
Lumens/Ft*	500	700	1000	1400
System Wattage/Ft	3.49W	5.00W	7.19W	10.37W
Efficacy (Lm/W)	143	140	139	135
CRI	>82	>82	>82	>82
Dimming	0-10V	0-10V	0-10V	0-10V
Color Consistency	>3 SDCM	>3 SDCM	>3 SDCM	>3 SDCM
Rated Life (L70)	>100,000 hrs	>100,000 hrs	>100,000 hrs	>100,000 hrs

** Lumen output was calculated with 4000K LEDs.*

White Lumen Adjustment Factors 80 CRI

CCT	2700K	3000K	3500K	4000K	5000K
Adjustment	93.5%	95.2%	96.8%	100.0%	103.0%

White Lumen Adjustment Factors 90 CRI

CCT	2700K	3000K	3500K	4000K	5000K
Adjustment	77.5%	79.2%	80.8%	85.1%	87.3%

Red

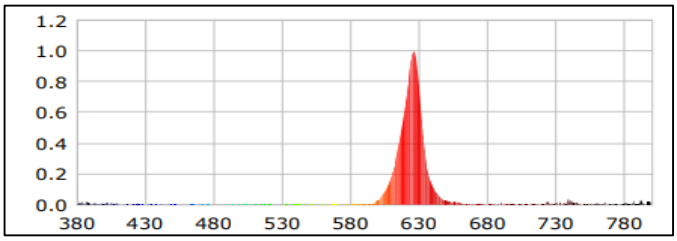

Green

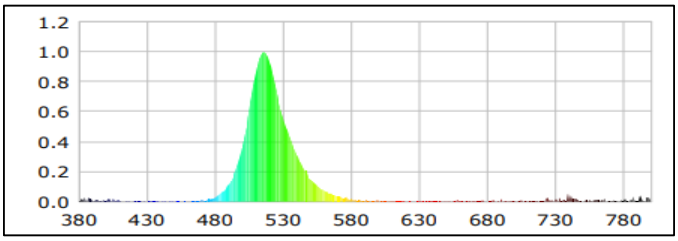
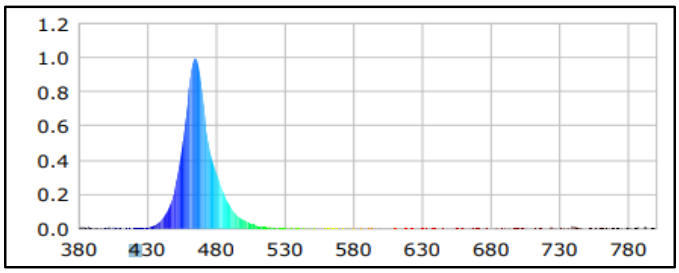
Blue