Advantage. Environmental Lighting

# LXDL - Linear Recessed

PROJECT

CATALOG #

TYPE

## Highlights

- Tool-Less Entry
- High efficacy and lifespan LEDs
- Recessed, Flanged, and Flangeless Trim mounting

**Description**
The LXDL is a bold perimeter slot/reveal luminaire. Optional shadow mold bracket is designed to be easily installed for both flush and 3" regressed mounting in common ceiling types. Available in continuous runs and custom angles and lengths.*

**Construction**
Constructed of a precision cut, proprietary aluminum extrusion with flat end caps. Internal joiner system. Available in any length with a 2' minimum.

**Tool-less Entry**
LED Board tray clips in with quick release holders, and held on by tethers. Releasing the clips drops and holds the board tray, allowing quick, tool-less, and easy wiring of the fixture.

**Mounting**
Lay-in grid fixtures fit 9/16 and 15/16 standard T-grids. Flanged mounting and flangeless trim mounting options include innovative top mount bracket to support the fixture.

**LEDs**
High Output LEDs are available in 2700K, 3000K, 3500K, 4000K, and 5000K color temperatures. Integral LEDs are rated for at least 100K life hours (L70).

**Optics**
Snap-in satin acrylic lens fully diffuses the appearance of the LEDs and provides excellent light transmission.

**Driver**
0-10V dimming driver included standard. Driver options available for 1% dimming, Lutron EcoSystem, and DALI.

**Finish**
Matte white finish standard. Custom finish options are available in various RAL colors.

**Options**
Various options are available. If additional or custom options are needed, consult factory.

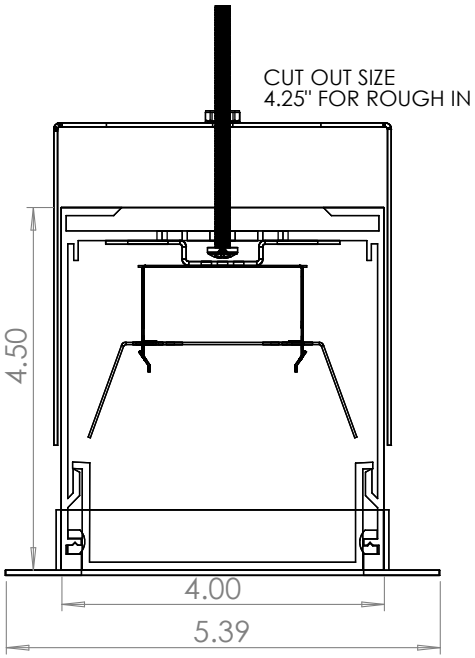


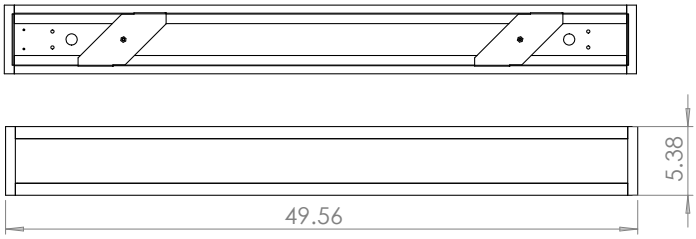


**For special runs, such as wall-to-ceiling, 90 degree or custom angle turns, add desired length after the option. eg: LXDL-T-40-10L-M-W-14-90D-13 for 14 foot to 90 degree turn to 13 foot.*



www.aelnow.com | info@aelnow.com

# LXDL - Linear Recessed

## ORDERING INFORMATION

**Example**: LXDL-SM3-40-10L-M-W-4
With options: LXDL-SM3-40-10L-M-W-4-12EBL

| Fixture | Mounting | CCT | Output | Voltage | Finish | Length |
|---|---|---|---|---|---|---|
| LXDL | ■ **SM3** *Shadowmold + 3" Gyp* | ■ **27** *2700K* | ■ **5L** *500 Lm/Ft* | ■ **M** *Multi-Volt (120-277V)* | ■ **W** *Matte White* | ■ **2** *2 ft* |
| | ■ **SRT3** *Shadowmold + 3" Regressed T-bar* | ■ **30** *3000K* | ■ **7L** *700 Lm/Ft* | | ■ **SP** *Special Finish* | ■ **3** *3 ft* |
| | ■ **T** *Flush T-Bar* | ■ **35** *3500K* | ■ **10L** *1000 Lm/Ft* | | | ■ **4** *4 ft* |
| | ■ **FLG** *Flush Gyp* | ■ **40** *4000K* | ■ **14L** *1400 Lm/Ft* | | | ■ **5** *5 ft* |
| | | ■ **50** *5000K* | ■ **XXXXL** *XXXX Lm/Ft* | | | ■ **6** *6 ft* |
| | | | | | | ■ **7** *7 ft* |
| | | | | | | ■ **8** *8 ft* |
| | | | | | | ■ **XX** *XX ft* ***(custom*)*** |

**For special runs, such as wall-to-ceiling, 90 degree or custom angle turns, add desired length after the option. eg: LXDL-T-40-10L-M-W-14-90D-13 for 14 foot to 90 degree turn to 13 foot.*

**Options:** Add to end of part number

| Driver Options | Options | |
|---|---|---|
| ■ **(BLANK)** *0-10V 10% dimming driver* | ■ **12EBL** *1200 Lumen Emergency Ballast* | |
| ■ **CD1** *0-10V 1% dimming driver* | ■ **EC** *Emergency Circuit* | |
| ■ **CD5** *0-10V 5% dimming driver* | ■ **90** *90 CRI* | |
| ■ **EDN** *Non-dimming electronic driver* | ■ **90D** *90 Degree Turn* | |
| ■ **DALI** *DALI 1% dimming driver* | ■ **90V** *90 Degree Ceiling-to-Wall* | |
| ■ **LDE1** *Lutron Hi-Lume 1% EcoSystem LED Driver* | ■ **XXD** *XX Degree turn (90 to 60 degrees)* | |

# LXDL - Linear Recessed

SPECIFICATIONS

## LED Information

| Output | 5L | 7L | 10L | 14L |
|---|---|---|---|---|
| Lumens/Ft* | 500 | 700 | 1000 | 1400 |
| System Wattage/Ft | 3.125W | 4.375W | 6.25W | 8.75W |
| Efficacy (Lm/W) | 160 | 160 | 160 | 160 |
| CRI | >82 | >82 | >82 | >82 |
| Dimming | 0-10V | 0-10V | 0-10V | 0-10V |
| Color Consistency | >3 SDCM | >3 SDCM | >3 SDCM | >3 SDCM |
| Rated Life (L70) | >100,000 hrs | >100,000 hrs | >100,000 hrs | >100,000 hrs |

** Lumen output was calculated with 4000K LEDs.*

## Lumen Adjustment Factors 80 CRI

| CCT | 2700K | 3000K | 3500K | 4000K | 5000K |
|---|---|---|---|---|---|
| Adjustment | 93.5% | 95.2% | 96.8% | 100.0% | 103.0% |

## Lumen Adjustment Factors 90 CRI

| CCT | 2700K | 3000K | 3500K | 4000K | 5000K |
|---|---|---|---|---|---|
| Adjustment | 77.5% | 79.2% | 80.8% | 85.1% | 87.3% |

## Mounting Options

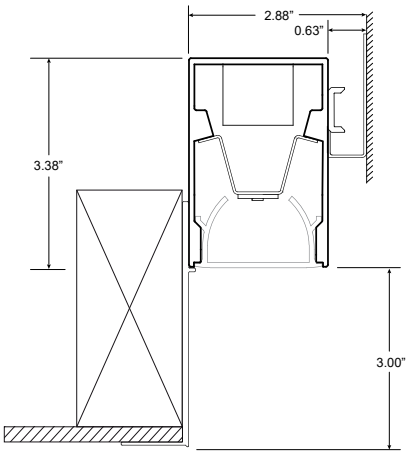


(SM3) | Shadowmold + 3" Gyp

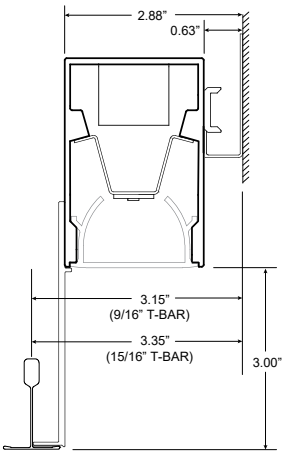


(SRT3) | Shadowmold + 3" Regressed T-bar

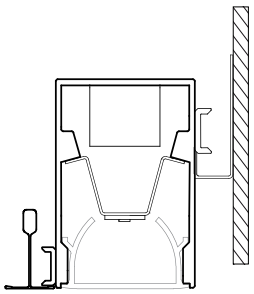

(T) | Flush T-Bar

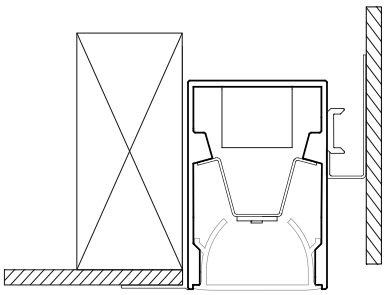

(FG) | Flush Gyp