ADVANTAGE ENVIRONMENTAL LIGHTING

CATALOG #:

PROJECT:

TYPE:

LVTR

COMMERCIAL GRADE LED VAPOR TIGHT

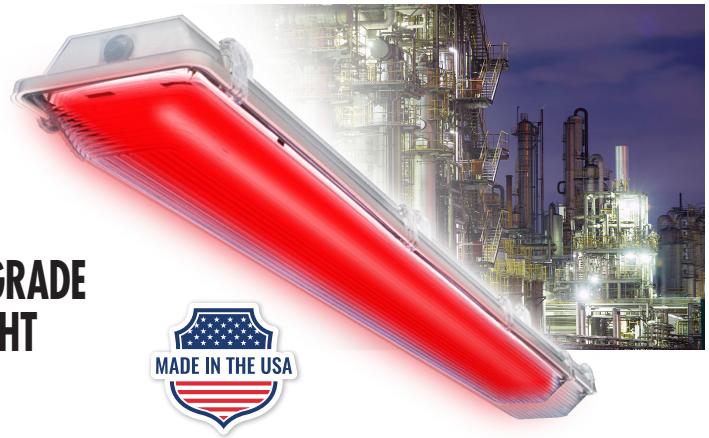

MADE IN THE USA

PRODUCT SPECIFICATIONS

DESCRIPTION: The LVTRSeries is a Commercial Grade LED Vapor Tight, gasketed enclosure that is completely dust and moisture resistant. The LVTRutilizes state-of-the-art LED technology to deliver the highest possible efficiency in the lighting industry.

APPLICATIONS: The LVTRSeries of LED Vapor Tights were designed to be high quality, energy efficient LED fixtures for use in food processing facilities, kitchens, parking garages, canopy, stair well car washes, government facilities, schools, public areas and industrial facilities. Suitable for both indoor and outdoor applications.

CONSTRUCTION: The fixture is constructed of a fiberglass housing with a VA (f1) FRP UL rating, and an acrylic or polycarbonate diffuser securely positioned in a permanent, poured-in-place, polyurethane sealing gasket. The diffuser and upper components are locked in place and sealed tightly with polycarbonate retaining latches or optional stainless steel latches. High impact acrylic/DR material diffuser composition. Positive cam latches. Polyethylene molded end plugs.

OPTICAL SYSTEM: High output LED's available in 2700K, 3000K, 3500K, 4000K, and 5000K. CRI >82. Diffuser softens light dissipation for even light coverage. Various lens materials available.

ELECTRICAL SYSTEM: 0-10V dimming driver included standard. Long-life LED system rated for >120K life hours (L70 @ 25°C). Metal gear tray for internal LED driver. Complies with federal energy efficiency standards.

CONTROLS: The fixture is compatible with 0-10V dimming controls, 0-10V dimming driver included standard. 50% step dimming is available upon request.

MOUNTING: The fixture can be suspended or surface mounted. Optional top only hub entry or combination top and end hub entry available for stem mounting applications. Die formed galvanized mounting brackets come standard. No holes required for mounting. Unitized internal/external brass mounting stud for structural integrity and continuity of ground.

LISTINGS: Independantly tested to IESNA LM-79 and LM-80 specifications. UL and cUL Listed. CSA approved. NSF International Certified. IP65, IP66 and IP67 Certified for Wet Location applications. Proudly made in America. Manufactured in Fort Worth, Texas.

WARRANTY: 5-Year Limited Warranty. Complete warranty and terms located at **www.aelnow.com/warranty**.

ORDERING INFORMATION

Example: LVT_2_27_HL_M_SA_50R50W_VDO

SERIES	LENGTH (IN)	CCT	OUTPUT	VOLTAGE	LENS OPTIONS/ILLUMINATION LEVEL	OPTIONS
LVT	2 27.69" Overall Length	27 2700K	SL Standard Low	M Multi-Volt (120-277VAC)	BLANK Shallow Lens Acrylic (Frosted) - Standard	12EBL 1200 Lumen Emergency Ballast
	4 51.65" Overall Length	30 3000K	ML Medium Low		RA Acrylic Ribbed	OC4EX Occupancy Sensor
	8 99.65" Overall Length	35 3500K	HL High Low		RAF Acrylic Ribbed* (Frosted)	OC4EXD Occupancy Sensor (Dimming)
		40 4000K	SM Standard Medium		DAF Deep Lens Acrylic* (Frosted)	1P Single Pendant w/ Reinforcement Plate (Pendant Supplied by Others)
		50 5000K	MM Medium Medium		DAS Deep Lens Acrylic* (Smooth)	2P Double Pendant w/ Reinforcement Plate (Pendant Supplied by Others)
			HM High Medium		SA Shallow Lens Acrylic* (Smooth)	SSLTP Stainless Steel Tamper Proof Latches
			SH Standard High		SPF Shallow Lens Polycarbonate* (Frosted)	PTP Polycarbonate Tamper Proof Latches
			MH Medium High		SPS Shallow Lens Polycarbonate* (Smooth)	LDE1 Lutron LDE1 Hi-Lume 1% EcoSystem Fade-To-Black Driver Upgrade
			HH High High		25R40W 25W Red/40W White LED	LDES Lutron LDE5 5-Series EcoSystem 5% Dimming Driver Upgrade
					25R50W 25W Red/50W White LED	VDO Vive Integral RF controller with daylight and occupancy sensing.
					25R70W 25WRed/70W White LED	45WMB Stainless Steel 45° Wall Mount Bracket
					25R90W 25W Red/90W White LED	CMB Stainless Steel Chain Mounting Brackets
					25R135W 25W Red/135W White LED	
					50R50W 50W Red/50W White LED	
					50R70W 50W Red/70W White LED	
					50R90W 50W Red/90W White LED	
					50R135W 50W Red/135W White LED	
					25R 25W Red LED	
					50R 50W Red LED	

ADVANTAGE ENVIRONMENTAL LIGHTING

CATALOG #: CATALOG NUMBER:

PROJECT: PROJECT:

TYPE: TYPE:

LVTR

COMMERCIAL GRADE
LED VAPOR TIGHT

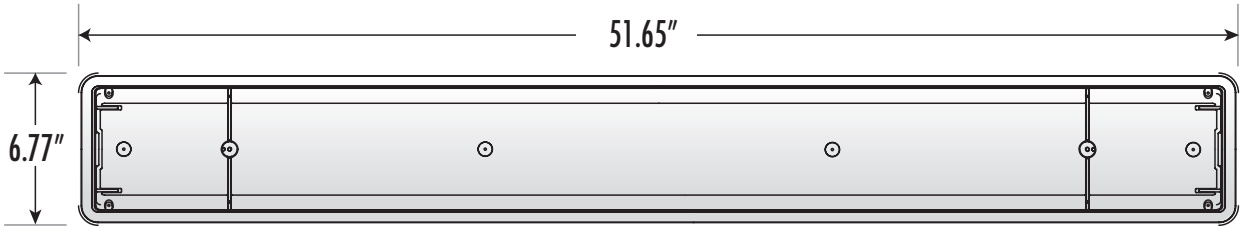

FIXTURE ANALYSIS

DIMENSIONS:	51.65″ X 6.77″ X 4.25″
MOUNTING:	SURFACE OR SUSPENSION
WEIGHT:	12 LBS
WARRANTY:	5-YEAR LIMITED

LENS DIMENSIONS

STANDARD:	1.92" X 6.40"
DEEP:	3.50" X 6.40"
SHALLOW:	1.92" X 6.40"

HIGH IMPACT

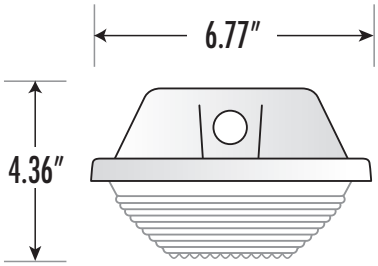

DEEP LENS

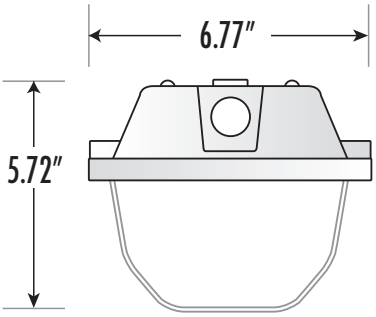

SHALLOW LENS

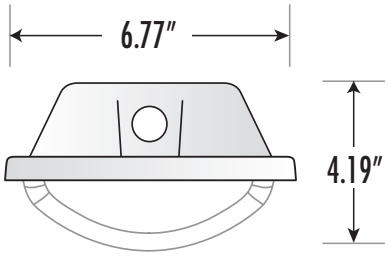

ENERGY AND PERFORMANCE DATA

INPUT VOLTAGE:	120/277VAC
SYSTEM INPUT POWER:	33 - 179 WATTS*
DELIVERED LUMEN OUTPUT:	4650 - 25000 LUMENS
STANDARD DIMMING CONTROL:	0-10V
CCT:	3000, 3500, 4000, 5000 KELVIN
CRI:	82 (MINIMUM)
LIFE TIME RATING:	>120,000 HRS @ L70
INPUT FREQUENCY:	50/60 HZ
POWER FACTOR:	>0.9
OPERATING TEMP:	30° TO 50° C

*ACTUAL WATTAGE MAY DIFFER BY ±5% WHILE OPERATING 120/277V ±10%

OUTPUT	DELIVERED LUMENS	SYSTEM WATTAGE	L70 @20C (HRS)
SL	4650	33	>120K
ML	7974	57	>120K
HL	11150	80	>120K
SM	12040	86	>120K
MM	13016	93	>120K
HM	15728	112	>120K
SH	16500	118	>120K
MH	20000	143	>120K
HH	25000	179	>120K

APPROXIMATE COLOR TEMPERATURE MULTIPLIER

			LUMENS		
5000K	X	1.03	_____	=	
4000K	X	1	_____	=	
3500K	X	.97	_____	=	
3000K	X	.94	_____	=	
2700K	X	.91	_____	=	

LUTRON PSI 1500 IP67 CERTIFIED IP66 CERTIFIED IP65 CERTIFIED