Advantage Environmental Lighting

Catalog Number	
Project	
Type	

PRODUCT SPECIFICATIONS

LVC

Low Voltage Controller

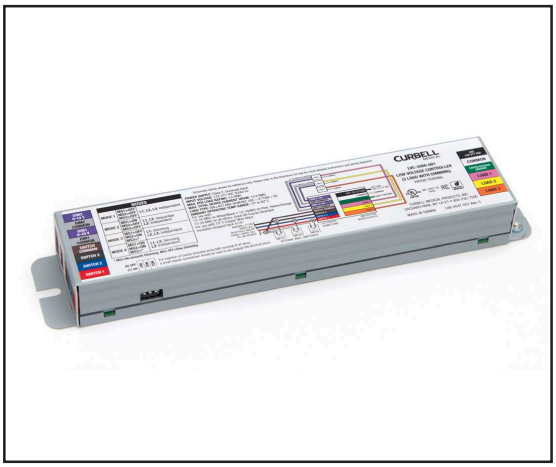

DESCRIPTION

The LVC low voltage controller allow patients to safely operate high-voltage circuits such as lights, electric doors, and drapes with their pillow speaker or bed communication side rail. The LVC can mount either in the wall/headwall or in the lighting fixture itself. The LVC has ability to control up to three loads with dimming. Most importantly, it allows dimming, giving your patients the ability to set the lighting to the level that makes them the most comfortable

FEATURES

- Can be used to operate high-voltage circuits such as lights, electric doors, blinds, and drapes
- Compatible with incandescent, fluorescent, and LED lighting
- Can be controlled from a pillow speaker, bed side rail, or wall switch with normally-open momentary dry contacts
- Can be set up for multiple modes of operation
- Safe for use near medical equipment that is sensitive to electromagnetic noise

CONFIGURATION OPTIONS

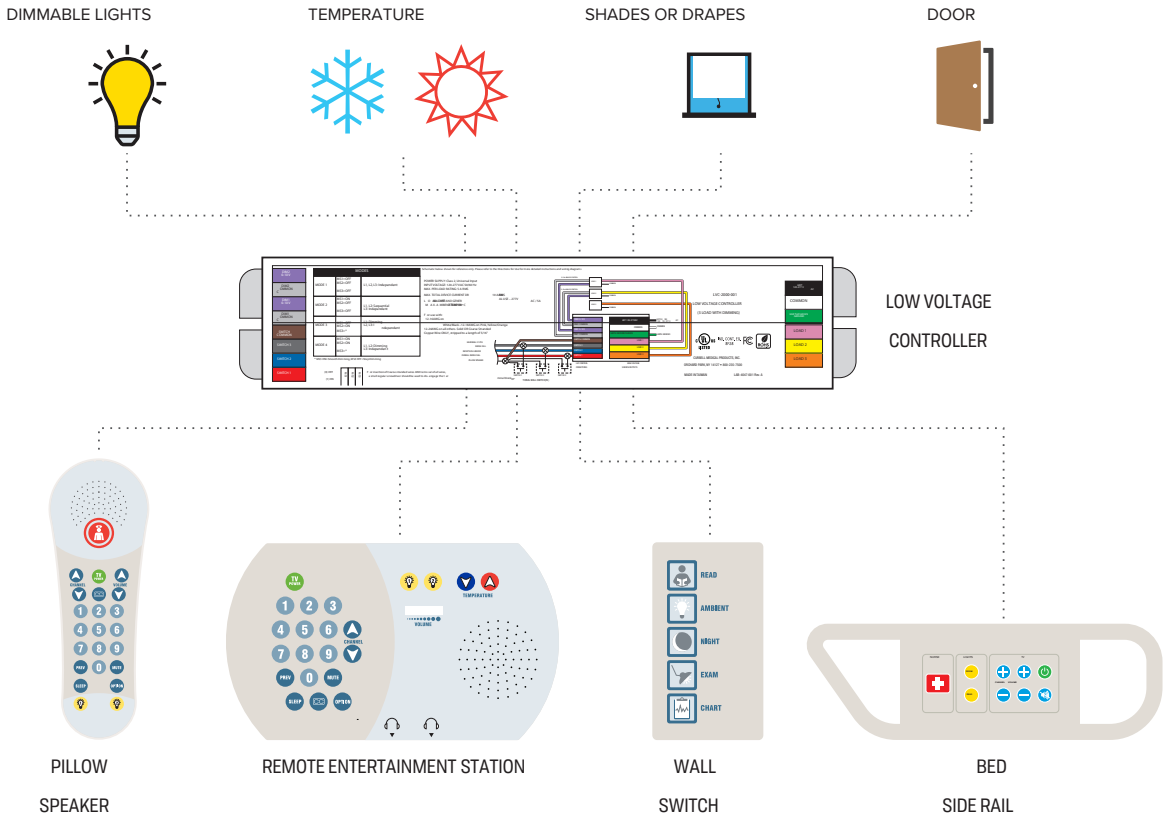

WIRING DIAGRAMS

MODE 1 (DEFAULT):
LOAD 1, 2, AND 3 INDEPENDENT ON/OFF (NO DIMMING)

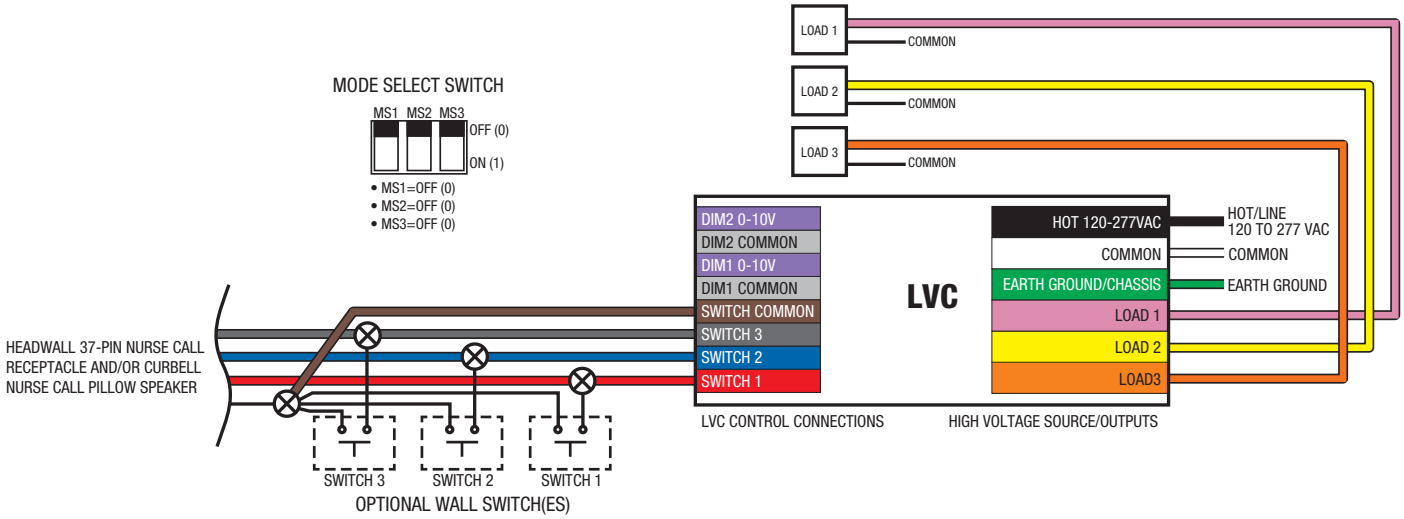

MODE 2:
LOAD 1 AND 2 SEQUENTIAL / LOAD 3 INDEPENDENT ON/OFF (NO DIMMING)

	LOAD 1	LOAD 2
After power up:	Off	Off
1st Switch	On	Off
2nd Switch	Off	On
3rd Switch	On	On
4th Switch	Off	Off

Sequential

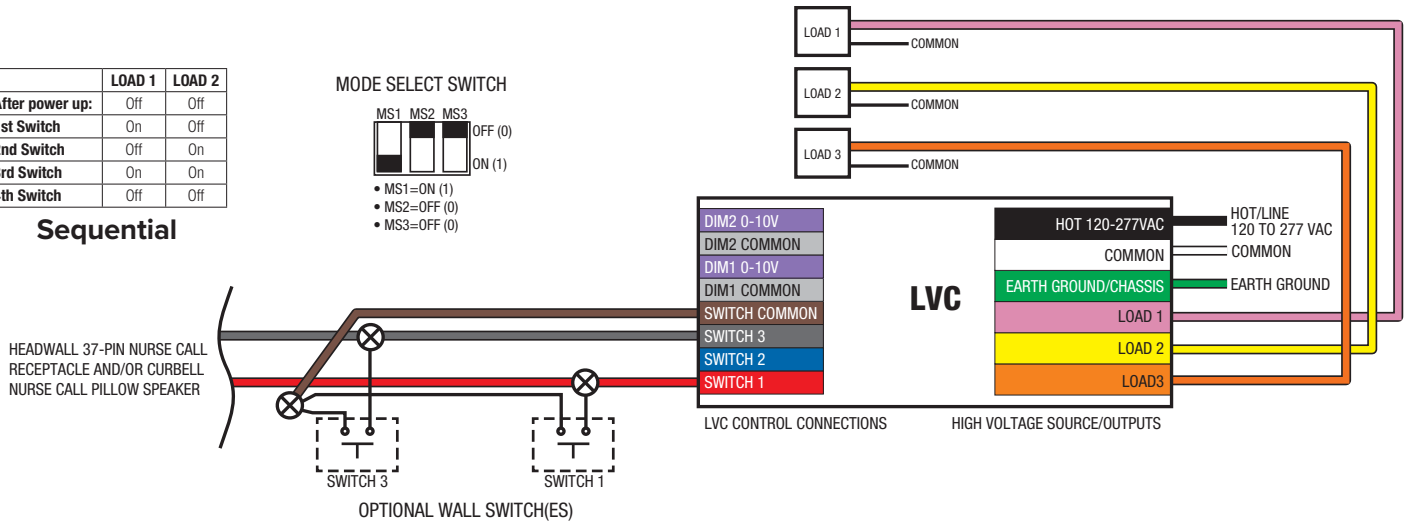

WIRING DIAGRAMS

MODE 3:
LOAD 1 INDEPENDENT (WITH DIMMING) / LOAD 2 AND 3 INDEPENDENT ON/OFF (NO DIMMING)

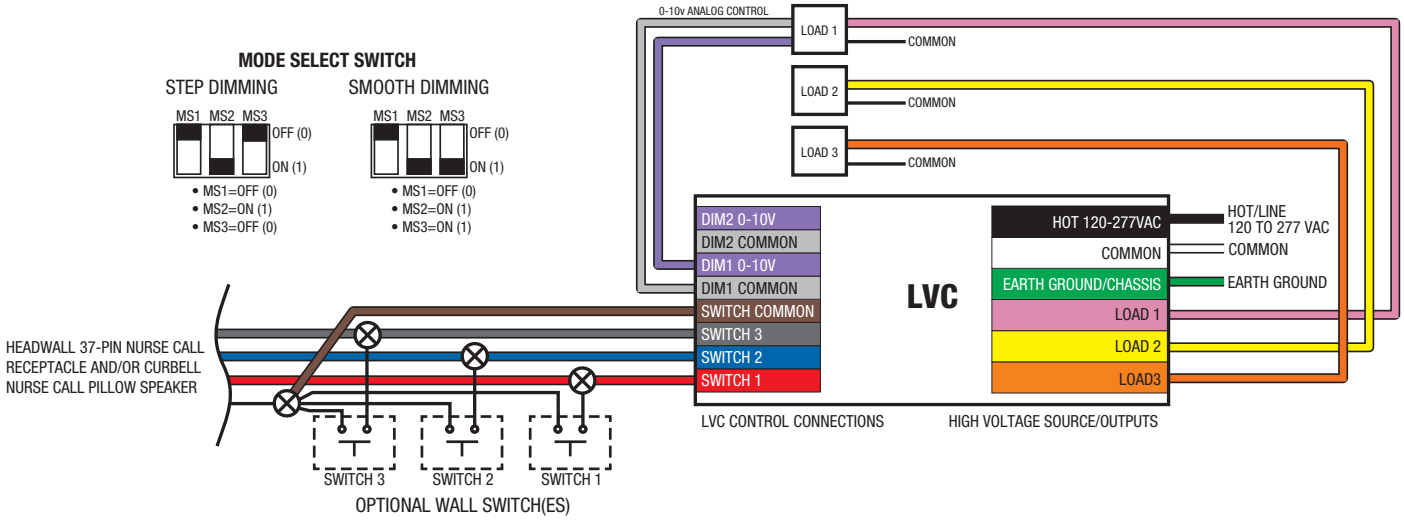

MODE 4:
LOAD 1 AND 2 INDEPENDENT (WITH DIMMING) / LOAD 3 INDEPENDENT ON/OFF (NO DIMMING)

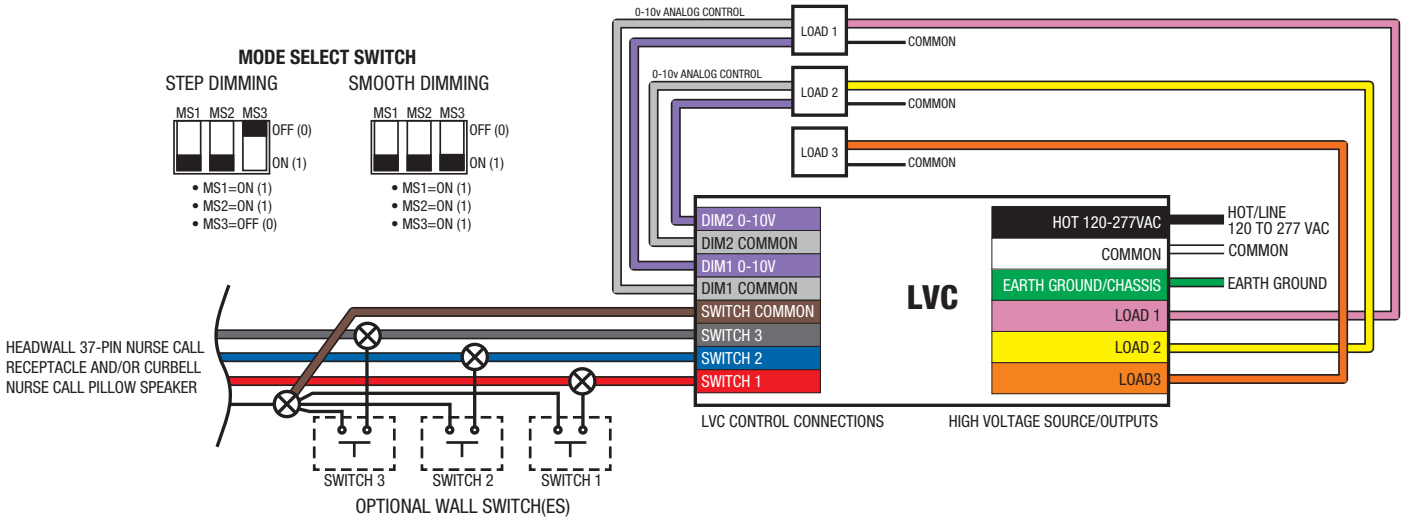

COMMON SPECIFICATIONS	
Input Voltage	▶ 120-277 VAC, 60 Hz ▶ 277 VAC, 5 A, General Use ▶ 277 VAC, 5 A, Ballast ▶ RMS current should not exceed 5 amps per load
Load Type	▶ 277 VAC, 5 A, General Use per Load ▶ 277 VAC, 5 A, Ballast per Load ▶ Maximum total device current: 10 A
Output Voltage	120-277 VAC, 60 Hz
Output Devices	Three 30 amp relays driven by low voltage microcontroller, ESD protected
Low Voltage Momentary Switch Requirements	Dry contacts, momentary, normally open, capable of switching 5 VDC @ 0.5 mA
Switching Circuits Operation Voltage	5 VDC @ 0.5 mA
Power Supply Classification	UL listed switch mode power supply
Operating Temp. Range	50º to 176º F (10º to 80º C)
External wires	▶ White/Black: 12-16 AWG, solid or coarse stranded ▶ Pink, Yellow, Orange, Green: 12-18 AWG, solid or coarse stranded ▶ All other wires: 12-24 AWG, solid or coarse stranded ▶ For use only with 75º C copper wire, insulation stripped back 5/16" ▶ Ensure that wire used exceeds corresponding voltage ratings
Mounting	▶ Mounts in a lighting fixture, ceiling, or headwall ▶ May be mounted in a five gang masonry box with physical separation between high and low voltage
Housing	.032" Galvanized Zinc-Plated Steel
Dimensions	9" with tabs (L) x 1.90" (W) x 1.10" (H)
Warranty	Three Years
Regulatory Listings and Compliance	UL/C-UL Listed to UL 508 | Compliant with FCC, Title 47 CFR 15 – Class B | RoHS compliant

UNIQUE SPECIFICATIONS	LVC-001	LVC-004
Lamp Type	Fluorescent, LED, and other lamp types	LED lamps only
Dimming Control	▶ Current sourcing ▶ 0-10V step and smooth ▶ One direction (100% to off)	▶ Current sourcing ▶ 0-10V step and smooth ▶ Bi-directional with quick on/off