ADVANTAGE ENVIRONMENTAL LIGHTING

CATALOG #:	
PROJECT:	
TYPE:	

LSBNR LED STRIP NARROW REFLECTOR

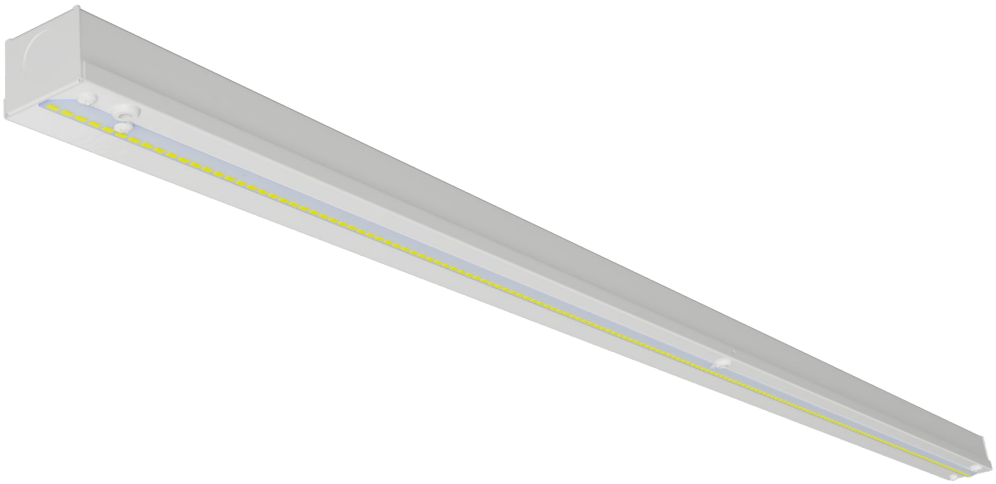

DESCRIPTION: The LSBNR Series is an LED Strip available in 1' through 8' body lengths. It was designed for surface or suspended mounting applications. High efficacy LED system allows for economical energy and cost savings vs traditional strip luminaires.

APPLICATIONS: The LSBNR Series of LED Strips were designed to be high quality, energy efficient LED fixtures for use in commercial applications, offices, government facilities, schools, and public areas.

CONSTRUCTION: The fixture is constructed of a heavy gauge cold rolled steel body.

OPTICAL SYSTEM: Narrow beam reflector directs LEDs in a narrow output. Available without reflector. White polyester polymer finish with a high reflectivity.

ELECTRICAL SYSTEM: 120-277V applications. 50-60 Hz operation. 0-10V dimming standard. Long-life LED system rated for >100K life hours (L70@ 25°C). Complies with federal energy efficiency standards.

MOUNTING: Surface or pendant mount, individually or in continuous rows. Sufficient knockouts are provided. Double KO access on 4 ft and longer.

LISTINGS: ETL and cETL Listed. Indoor use only.

WARRANTY: 5-Year Limited Warranty. Complete warranty and terms located at **www.aelnow.com/warranty**.

ORDERING INFORMATION **Example:** LSBNR-4-40-H-NBR-M-AC20

LSBNR						

SERIES	SIZE		COLOR TEMP		ILLUMINATION LEVEL			REFLECTOR		VOLTAGE		OPTIONS	
LSNBR	2	2'	27	2700K	S	Standard	(3,600L)	BLANK	None	M	Multi-Volt (120-277VAC)	12EBL	12W Emergency Driver
	3	3'	30	3000K	M	Medium	(4,700L)	NBR	Narrow Beam			SD	Step Dimming Driver
	4	4'	35	3500K	H	High	(6,800L)					SBA2	Asymmetrical Reflector(2')
	6	6'	40	4000K	XX	Custom Lumens (specify)						SBA3	Asymmetrical Reflector (3')
	8	8'	50	5000K								SBA4	Asymmetrical Reflector (4')
												JC10	10' Jack Chain
												ETH	End Mount Tong Hangers
												STH	Side Mount Tong Hangers
												AC10	10' Aircraft Cable Set
												AC20	20' Aircraft Cable Set
												SBWG2	Wire Guard (2')
												SBWG3	Wire Guard (3')
												SBWG4	Wire Guard (4')

ADVANTAGE ENVIRONMENTAL LIGHTING

CATALOG #:

PROJECT:

TYPE:

FIXTURE DIMENSIONS

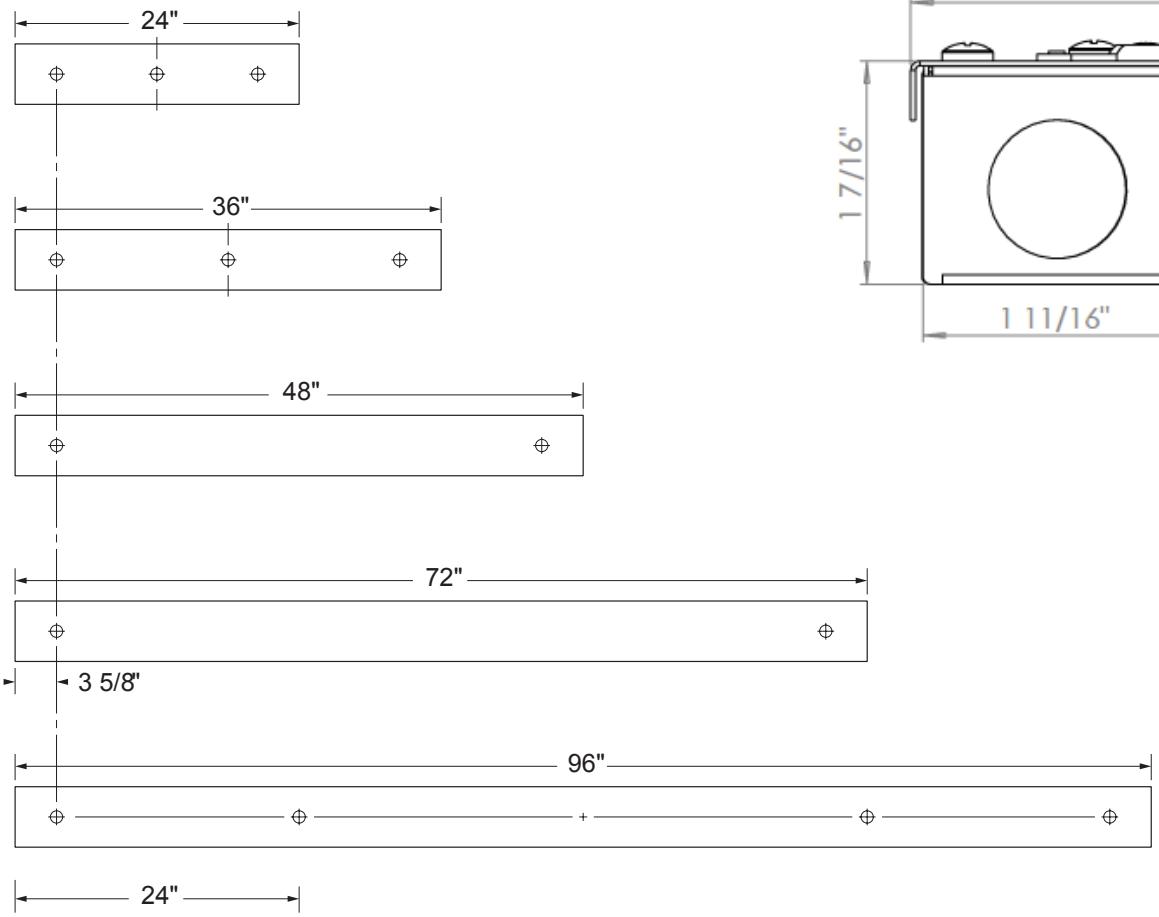

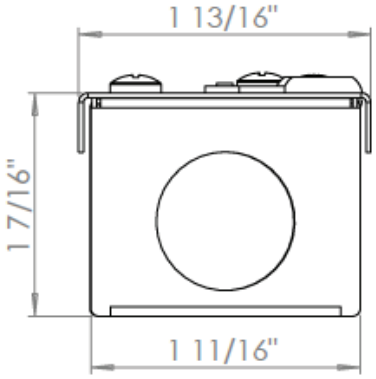

LED SYSTEM DATA

Output	Delivered Lumens	Nominal Wattage	L70 @45°C (hrs)	120V	277V
Standard	3600	25	>100K	.21 A	.09 A
Medium	4700	33	>100K	.28 A	.12 A
High	6800	48	>100K	.40 A	.18 A