Advantage Environmental Lighting

Catalog Number	
Project	
Type	

LISD

Reflector LED Striplight

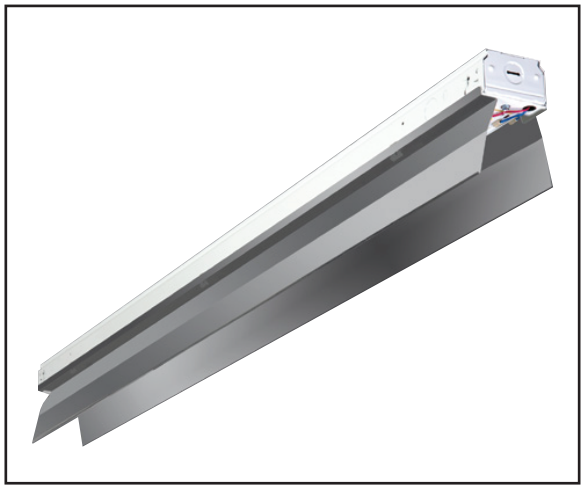

STANDARD	OPTIONAL
	LUTRON®

ORDERING INFORMATION

Example: LISD4-40-ML-RS-M-AC20-W1-12EBL

PRODUCT SPECIFICATIONS

DESCRIPTION

The LISD is a narrow strip-light with focused a reflector. This high quality luminaire has a narrow design that makes it an ideal choice for industrial applications. The reflector is offered in two different versions - standard or high lumen models and are produced from either specular or white material.

APPLICATIONS

The LISDSeries of Commercial LED Strips were designed to be high quality, energy efficient LED fixtures for use in commercial applications, offices, government facilities, schools, public areas, and industrial lighting applications.

CONSTRUCTION

Channel is die formed cold rolled steel with numerous KOs for ease of installation. Groove for Tong Hanger. End plate quickly converts to snap-in channel connector for continuous row alignment. Channel/wireway cover secured with sheet metal screw.

OPTICAL SYSTEM

Reflector available in either specular or white material.

ELECTRICAL SYSTEM

Electronic drivers are available for 120/277V applications. Long-life LED system rated for >100K life hours (L70 @ 25°C). Metal gear tray for internal LED driver. Complies with Federal energy efficiency standards.

MOUNTING

Surface or pendant mount, individually or in continuous rows. Sufficient knockouts are provided. Double KO access on 4 ft and longer to facilitate wiring of units for multiple configurations.

LISTINGS

ETL and cETL Listed. Damp location rated.

WARRANTY

5-Year Limited Warranty. Complete warranty and terms located at www.aelnow.com/warranty.

SERIES		COLOR TEMP		ILLUMINATION LEVEL		REFLECTOR		VOLTAGE	
LISD2	2'	**30**	3000K	**SL**	Standard Low	**RS**	Specular	**M**	Multi-Volt (120-277VAC)
LISD4	4'	**35**	3500K	**ML**	Medium Low	**RW**	White		
LISDT	8'	**40**	4000K	**HL**	High Low				
		50	5000K	**SM**	Standard Medium				
				MM	Medium Medium				
				HM	High Medium				
				SH	Standard High				
				MH	Medium High				
				HH	High High				

HANGING OPTIONS		WIRING		OPTIONS	
AC10	Aircraft Cables 10'	**W1**	Plug in and cross over plug in options	**12EBL**	1200 Lumen Emergency Ballast
AC15	Aircraft Cables 15'	**W2**	(NEMA 5-15P) 6' Cord with NEMA Straight Plug	**CSS4WG**	Wire Guard
AC20	Aircraft Cables 20'	**W3**	(NEMA L7-15P) 6' Cord with NEMA Twist Plug	**CSA4WG**	Wire Guard
JC10	Jack Chain 3-piece at 10' with S-hooks			**OC4EXE**	Motion Sensor (End of Row)
RPXX	Rigid Pendant (Power Feed Capable) - Specify Length (XX)			**OC4EXM**	Motion Sensor (Middle of Row)
CPY100	Cord Pendant (No Power Feed) 100' Y-Hanger				
CPPFY100	Cord Pendant (Power Feed Capable 100' Y-Hanger				

Advantage Environmental Lighting

LISD

Reflector LED Striplight

FIXTURE DIMENSIONS

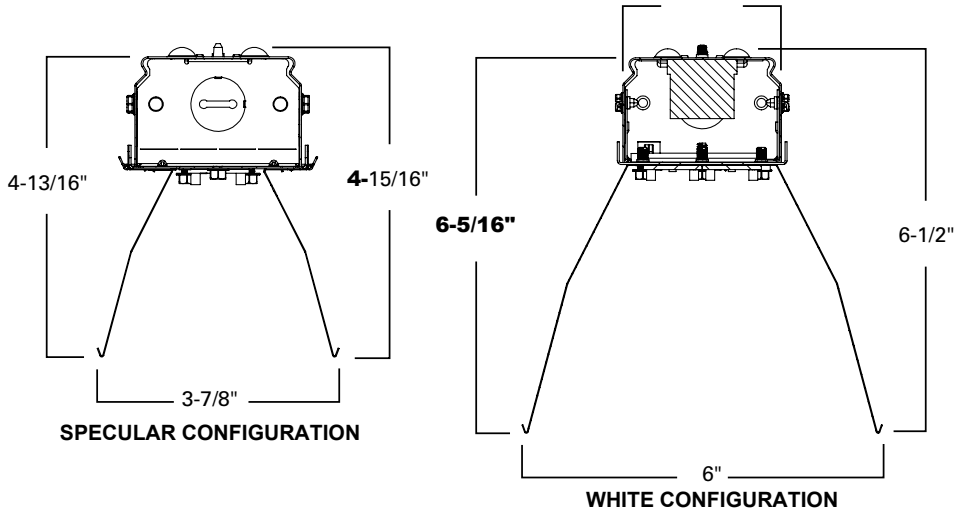

Output	Delivered Lumens	System Wattage	L70 @20C (hrs)
SL	4650	33	>100K
ML	7974	57	>100K
HL	11150	80	>100K
SM	12040	86	>100K
MM	13016	93	>100K
HM	15728	112	>100K
SH	16500	118	>100K
MH	20000	143	>100K
HH	25000	179	>100K

Approximate Color Temperature Multiplier	
5000K	1.03
4000K	1
3500K	0.97
3000K	0.94
2700K	0.91

ENERGY AND PERFORMANCE DATA

Input Voltage	120/277VAC
System Input Power	33 - 179 Watts*
Delivered Lumen Output	4650 - 25000 Lumens
Standard Dimming Control	0-10V
CCT	3000, 3500, 4000, 5000 Kelvin
CRI	82 (minimum)
Life Time Rating	100,000 hrs @ L70
Input Frequency	50/60 Hz
Power Factor	>0.9
Operating Temp	30° to 50° C

*Actual wattage may differ by ±5% while operating 120/277V ±10%