Advantage Environmental Lighting

Catalog Number	
Project	
Type	

LELV

LED 1x4, 2x2, 2x4
Low Profile Troffer

STANDARD | OPTIONAL

PRODUCT SPECIFICATIONS

DESCRIPTION

The LELV Series is a troffer fixture designed for recessed mounting applications. Available in 1x4, 2x2, and 2x4 sizes. The LELV offers the look and feel of a fluorescent luminaire with a contemporary look that blends with today's commercial spaces. The LELV utilizes state-of-the-art LED technology to deliver the highest possible efficiency in the lighting industry.

APPLICATIONS

The LELV Series of recessed troffers were designed to be high quality, energy efficient LED fixtures for use in commercial applications, hospitals, offices, government facilities, schools, and public areas. The LELV Series is designed to be suitable for use in standard 15/16" inverted T-Bar grid ceilings.

CONSTRUCTION

The fixture is constructed of a heavy gauge cold rolled steel body.

OPTICAL SYSTEM

High output LED's available in 3000K, 3500K, 4000K, and 5000K. CRI >82. The frosted acrylic lens provides a diffused luminance, with the effective combination of excellent light transmission and haze. White polyester polymer finish with a high reflectivity.

ELECTRICAL SYSTEM

Electronic drivers are available for 120/277V applications. Long-life LED system rated for >100K life hours (L70 @ 25°C). Metal gear tray for internal LED driver. Complies with federal energy efficiency standards.

MOUNTING

Recessed grid mounting.

LISTINGS

Independently tested to IESNA LM-79 and LM-80 specifications. ETL and cETL Listed. Manufactured in the USA.

WARRANTY

5-Year Limited Warranty. Complete warranty and terms located at www.aelnow.com/warranty.

ORDERING INFORMATION

Example: LELV4-40-HL-M
Custom Lumen Output Example: LELV4-40-HL-M-10000 for 10,000 lumens

SERIES		COLOR TEMP		ILLUMINATION LEVEL		VOLTAGE		OPTIONS	
LELV1	1x4	**30**	3000K	**SL**	Standard Low	**M**	Multi-Volt (120-277VAC)	**12EBL**	1200 Lumen Emergency Ballast
LELV2	2x2	**35**	3500K	**ML**	Medium Low			**FW**	6' Flex Whip
LELV4	2x4	**40**	4000K	**HL**	High Low			**SMS**	Surface Mount Shroud
		50	5000K	**SM**	Standard Medium			**FK22**	2x2 Flange Kit
				MM	Medium Medium			**FK24**	2x4 Flange Kit
				HM	High Medium				
				SH	Standard High				
				MH	Medium High				
				HH	High High				

1X4 and 2X2 sizes are only available up to SM - Standard Medium (12040 lumens)

Advantage Environmental Lighting

LELV

LED 1x4, 2x2, 2x4 Low Profile Troffer

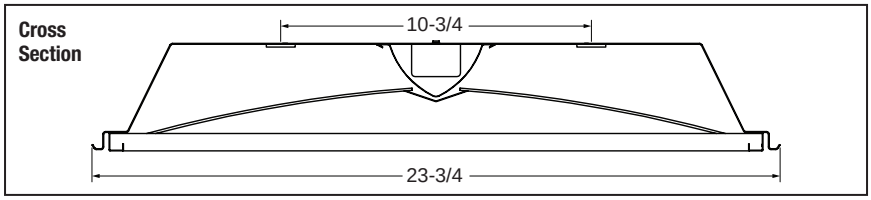

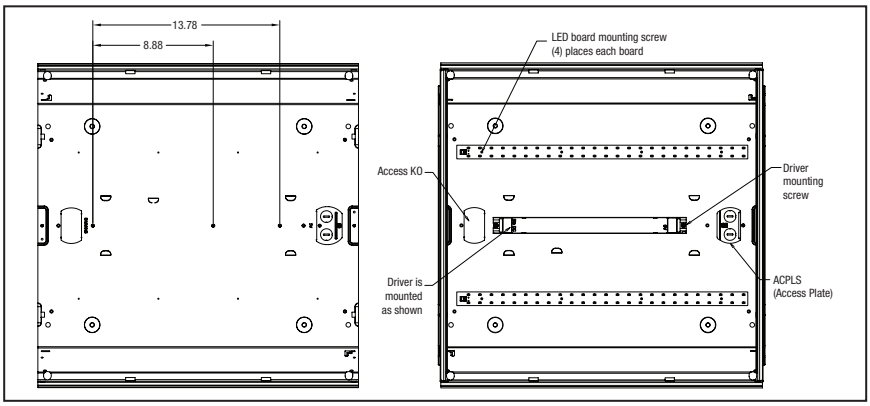

ENERGY AND PERFORMANCE DATA

Input Voltage	120/277VAC
System Input Power	33 - 179 Watts*
Delivered Lumen Output	4650 - 25000 Lumens
Standard Dimming Control	0-10V
CCT	3000, 3500, 4000, 5000 Kelvin
CRI	82 (minimum)
Life Time Rating	100,000 hrs @ L70
Input Frequency	50/60 Hz
Power Factor	>0.9
Operating Temp	30° to 50° C

*Actual wattage may differ by ±5% while operating 120/277V ±10%

Output	Delivered Lumens	System Wattage	L70 @20C (hrs)
SL	4650	33	>100K
ML	7974	57	>100K
HL	11150	80	>100K
SM	12040	86	>100K
MM	13016	93	>100K
HM	15728	112	>100K
SH	16500	118	>100K
MH	20000	143	>100K
HH	25000	179	>100K

* Delivered Lumens shown were tested with 4000K LEDs

Approximate Color Temperature Multiplier	
5000K	1.03
4000K	1
3500K	0.97
3000K	0.94
2700K	0.91