ADVANTAGE ENVIRONMENTAL LIGHTING

MADE IN THE USA

CATALOG #:

PROJECT:

TYPE:

LDL6RWWS

6" RECESSED STEEL DESIGNER LED LUMINAIRE

The **LDL6RWWS** Series is an architecturally designed Recessed Wall Wash Steel LED Luminaire that is classically styled and fit for any interior. It is available for continuous run mounting.

APPLICATIONS: The LDL6RWWS Series of Recessed Wall Wash Steel Luminaires were designed to be high quality, energy efficient LED fixtures for use in commercial applications, offices, hotel lobbies, museums, government facilities, schools, retail, public areas, and more.

CONSTRUCTION: The fixture is constructed of a 6" wide heavy gauge steel body. The fixture is available in any run length within 1' increments. Heavy duty housing crimped along sides for extra rigidity and straight alignment.

OPTICAL SYSTEM: High output LED's available in 3000K, 3500K, 4000K, and 5000K. CRI >82 (90 CRI is available). Satin lens provides for a beautiful architectural design while maintaining optimal light output.

ELECTRICAL SYSTEM: Electronic drivers are available for 120/277V applications. >50K life hours (L70 @ 25°C). Metal gear tray for internal LED driver. Complies with federal energy efficiency standards.

MOUNTING: This fixture is designed to be recessed mounted. Continuous run available.

LISTINGS: Independently tested to IESNA LM-79 and LM-80 specifications. ETL and cETL listed.

WARRANTY: 5-Year Limited Warranty. Complete warranty and terms located at **www.aelnow.com/warranty**.

Ordering Information on Next Page

ADVANTAGE ENVIRONMENTAL LIGHTING

CATALOG #:

PROJECT:

TYPE:

ORDERING INFORMATION Example: LDL6RWWS-L-30-S-M-W-4

SERIES	MOUNTING		CCT		OUTPUT		LENS		VOLTAGE		FINISH	
LDL6RWWS	L	Lay-in Grid	30	3000K	5L	500 lm/ft	S	Satin Lens	M	Multi-Volt (120-277VAC)	W	White
	F	Flanged	35	3500K	7L	700 lm/ft					SP	Special
	FT	Flangeless Trim	40	4000K	10L	1000 lm/ft						
			50	5000K	14L	1400 lm/ft						
					XXXL	XXX lm/ft						

ROW LENGTH*				OPTIONS	
2	2 Feet	6	6 Feet	EC	Emergency Circuit
3	3 Feet	7	7 Feet	14EBL	14 Watt Emergency Ballast
4	4 Feet	8	8 Feet	90	90 CRI
5	5 Feet	XX	XX Feet	CR	Continuous Run

**IGNORE ROW LENGTH WHEN ORDERING CEILING TO WALL APPLICATION*

***PLEASE SPECIFY LENGTH WHEN ORDERING CEILING TO WALL APPLICATION*

Dimensions on Next Page

LED Information

OUTPUT	5L	7L	10L	14L
Lumens	500	700	1000	1400
System Wattage/Ft.	3.125W	4.375W	6.25W	8.75W
Efficacy (Lm/W)	160	160	160	160
CRI	>82	>82	>82	>82
Dimming	0-10V	0-10V	0-10V	0-10V
Color Consistency	>3 SDCM	>3 SDCM	>3 SDCM	>3 SDCM
Rated Life (L70)	>100,000 hrs.	>100,000 hrs.	>100,000 hrs.	>100,000 hrs.

Lumens calculated with 4000K CCT LEDs

ADVANTAGE ENVIRONMENTAL LIGHTING

CATALOG #:

PROJECT:

TYPE:
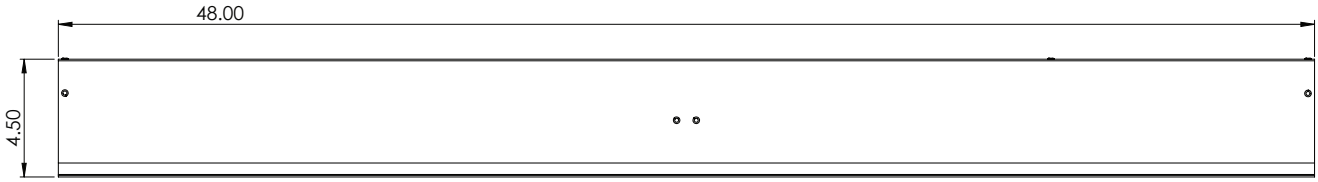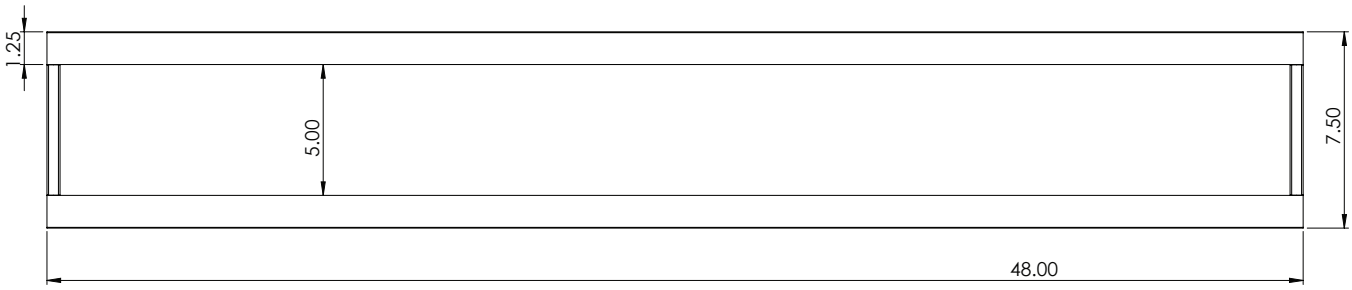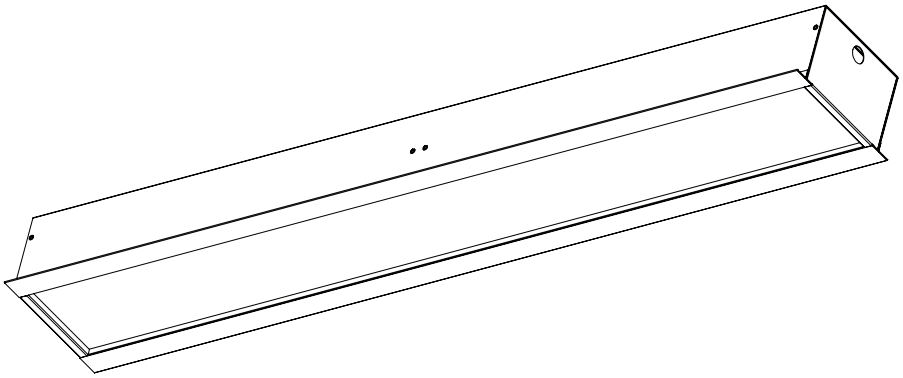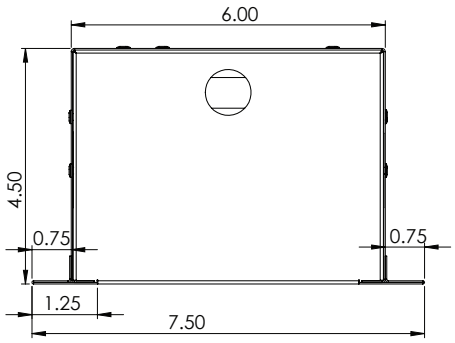
DIMENSIONS