ADVANTAGE ENVIRONMENTAL LIGHTING

MADE IN THE USA

CATALOG #:

PROJECT:

TYPE:

LDL6DIDS

6"X6" SUSPENDED MOUNT DIRECT/INDIRECT STEEL DESIGNER LED

DESCRIPTION: The **LDL6DIDS** Series is an architecturally designed Suspended Mount Direct/Indirect Steel LED Luminaire that is classically styled and it for any interior. It is available for continuous run mounting.

APPLICATIONS The 6 Series of Suspended Mount Direct/Indirect Steel LED Luminaires are designed to be high quality, energy efficient LED fixtures for use in commercial applications, offices, hotel lobbies, museums, government facilities, schools, and public areas.

CONSTRUCTION Our LDL6DIDS is constructed of a 6" wide heavy gauge steel body. The fixture is available in any run length within 1' increments. Heavy duty housing crimped along sides for extra rigidity and straight alignment. The direct/indirect lighting configuration provides ample downlight for tasks or general illumination while providing an aesthetically pleasing uplight to brighten spaces and eliminate the "cave" effect.

OPTICAL SYSTEM High output LED's available in 3000K, 3500K, 4000K, and 5000K. CRI >82. Satin lens provides for a beautiful architectural design while maintaining optimal light output.

ELECTRICAL SYSTEM Electronic drivers are available for 120/277V applications, 0-10v dimming standard. Long-life LED system rated for >100K life hours (L70 @ 45°C). Metal gear tray for internal LED driver. Complies with federal energy efficiency standards.

MOUNTING This fixture is designed to be suspended. Continuous runs available.

WARRANTY: 5-Year Limited Warranty. Complete warranty and terms located at **www.aelnow.com/warranty**. 10 year warranty available as an option below.

Ordering Information on Next Page ►

ADVANTAGE ENVIRONMENTAL LIGHTING

CATALOG #:

PROJECT:

TYPE:

ORDERING INFORMATION. Example: LDL6DIDS-4-40-12L-M-S-W

SERIES	LENGTH		CCT UP		OUTPUT UP		CCT DOWN		OUTPUT DOWN		VOLTAGE		LENS	
LDL6DIDS	2	2 ft.	30	3000K	5L	500 lm/ft	30	3000K	5L	500 lm/ft	M	Multi-Volt (120-277V)	S	Satin Acrylic
	3	3 ft.	35	3500K	7L	700 lm/ft	35	3500K	7L	700 lm/ft				
	4	4 ft.	40	4000K	10L	1000 lm/ft	40	4000K	10L	1000 lm/ft				
	5	5 ft.	50	5000K	14L	1400 lm/ft	50	5000K	14L	1400 lm/ft				
	6	6 ft.			XXXL	XXX lm/ft			XXXL	XXX lm/ft				
	7	7 ft.												
	8	8 ft.												
	XX	XX ft.												

FINISH		MOUNTING		OPTIONS	
W	Matte White	CPPF100	Cord Pendant (Power Feed Capable) 100" (8.25 feet)	14EBL	14 Watt Emergency Ballast
SP	Special Finish	CP100	Cord Pendant (No Power Feed) 100" (8.25 feet)	FW	Flex Whip Cable 6'
		CPPF150	Cord Pendant (Power Feed Capable) 150" (12.5 feet)		
		CPP150	Cord Pendant (No Power Feed) 150" (12.5 feet)		
		CPFX100-5W	5-Wire Cord Pendant (Power Feed) 100" (8.25 feet)		
		RPXX	Rigid Pendant (Power Feed Capable) - Specify Length (XX)		

FIXTURE DIMENSIONS

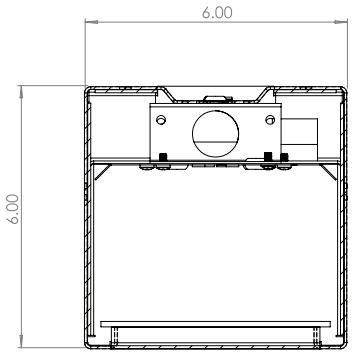

LED Information

OUTPUT	5L	7L	10L	14L
Lumens	500	700	1000	1400
System Wattage/Ft.	3.125W	4.375W	6.25W	8.75W
Efficacy (Lm/W)	160	160	160	160
CRI	>82	>82	>82	>82
Dimming	0-10V	0-10V	0-10V	0-10V
Color Consistency	>3 SDCM	>3 SDCM	>3 SDCM	>3 SDCM
Rated Life (L70)	>100,000 hrs.	>100,000 hrs.	>100,000 hrs.	>100,000 hrs.

Lumens calculated with 4000K CCT LEDs

ADVANTAGE ENVIRONMENTAL LIGHTING

CATALOG #:

PROJECT:

TYPE:

CPPF

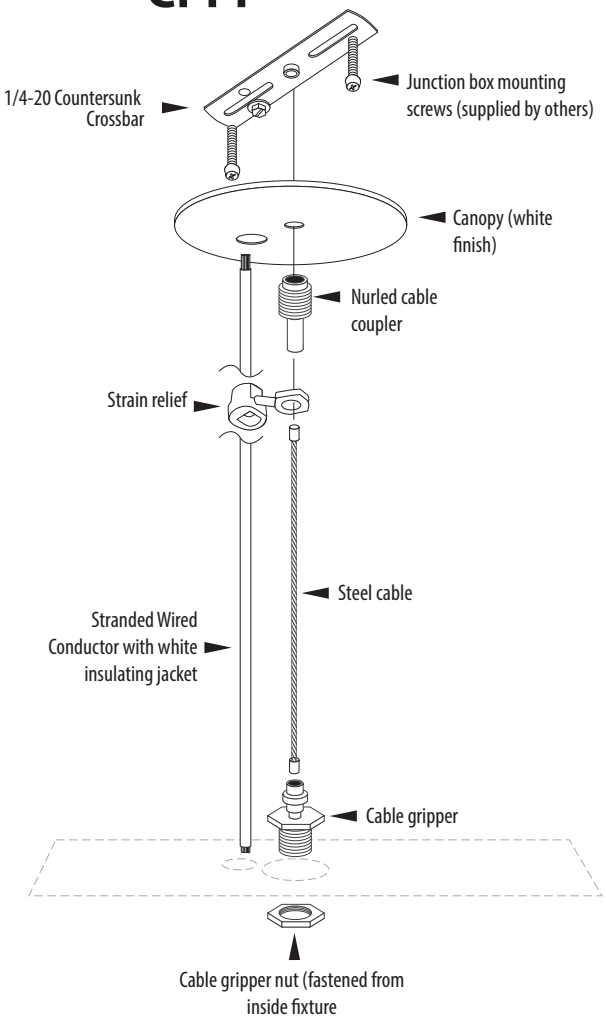

CP

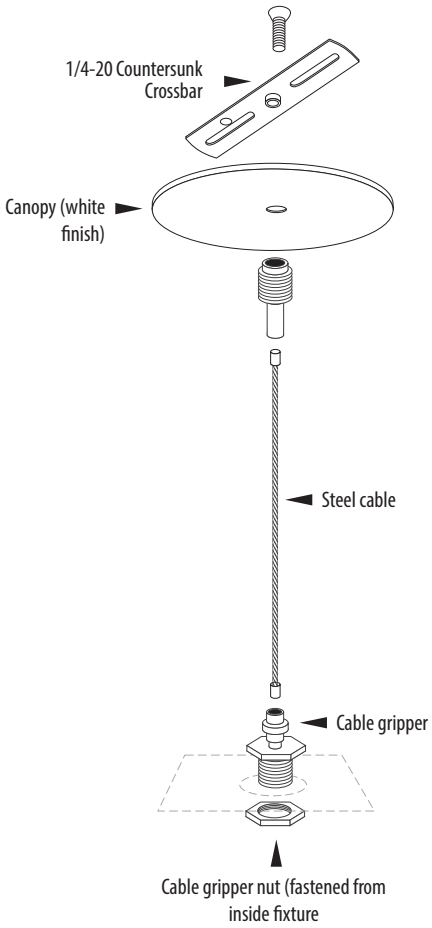
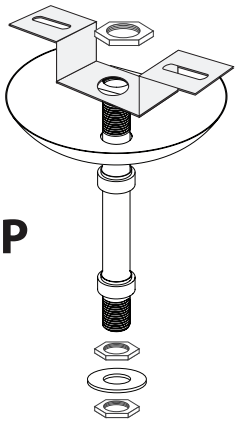
RP