ADVANTAGE ENVIRONMENTAL LIGHTING

MADE IN THE USA

CATALOG #:

PROJECT:

TYPE:

LDL23SM

2″ X 3" SURFACE MOUNTED LINEAR FIXTURE

DESCRIPTION: The LDL23SM is a 2″x3″ linear fixture designed for use in a wide variety of uses, including corridors, lobbies, office areas and more. This is a unique and compact fixture with a complete array of options. These can be installed individually or in continuous runs. Plus our snap-in lens does a great job of hiding internal components.

CONSTRUCTION: Die-formed and wleded 22-gauge cold rolled steel with knockouts on each end. Housing is designed for direct lighting (a direct-indirect fixture in the same size is available as LDL23SMDID)

OPTICAL SYSTEM: High output LED's available in 3000K, 3500K, 4000K, and 5000K. CRI >82 with 90 CRI as an option. Standard satin lens provides a beautiful architectural design while maintaining optimal light output.

ELECTRICAL SYSTEM: Our LDL23SM achieves 80% LED lumen maintenance at 60,000 hours using long-life LEDs. Coupled with high-efficiency drivers, this luminaire provides superior illumination and an extended service life. Electronic drivers are available for 120/277V applications, 0-10v dimming standard. Metal gear tray for internal LED driver. Complies with federal energy efficiency standards.

MOUNTING: This fixture is designed to be surface mounted. Continuous run available.

LISTINGS: Independently tested to IESNA LM-79 and LM-80 specifications. UL and cUL Listed.

WARRANTY: 5-Year Full Replacement Warranty.

Ordering Information on Next Page

ADVANTAGE ENVIRONMENTAL LIGHTING

CATALOG #:	
PROJECT:	
TYPE:	

ORDERING INFORMATION. Example: LDL23SM-4-40-10L

SERIES	LENGTH		CCT		OUTPUT		LENS		FINISH	
LDL23SM	2	2 ft.	30	3000K	5L	500 lm/ft	S	Satin Lens	W	Matte White
	3	3 ft.	35	3500K	7L	700 lm/ft			SP	Special Finish
	4	4 ft.	40	4000K	10L	1000 lm/ft				
	5	5 ft.	50	5000K	14L	1400 lm/ft				
	6	6 ft.			XXXL	XXX lm/ft				
	7	7 ft.								
	8	8 ft.								
	XX	XX ft.								

VOLTAGE		DRIVER OPTIONS		OPTIONS	
M	Multi-Volt (120-277V)	(BLANK)	0-10V 10% dimming driver	14EBL	14 Watt Emergency Ballast
		CD1	0-10V 1% dimming driver	FW	Flex Whip Cable 6'
		CD5	0-10V 5% dimming driver	VDO	Lutron Vive Integral fixture control
		EDN	Non-dimming electronic driver	OC4EX	Occupancy Sensor (RF with Daylight and Occupancy Sensing)
		DALI	1% Dali Dimming Driver		
		LDE1	Lutron Hi-Lume 1% EcoSystem LED Driver		
		PSQ02U	Lutron T-Series 1% 2-Channel Tunable White		
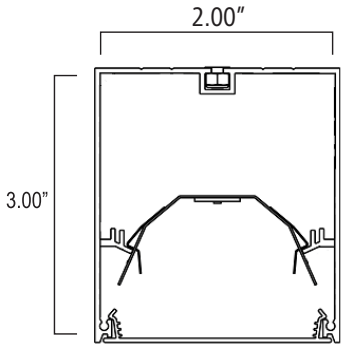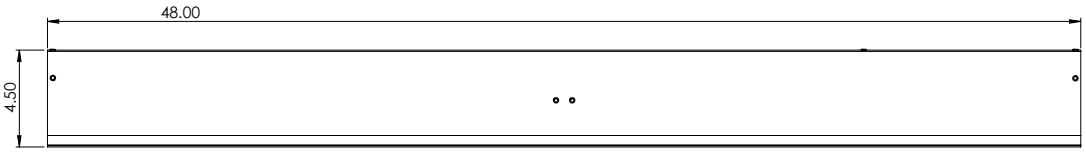
DIMENSIONS