ADVANTAGE ENVIRONMENTAL LIGHTING

MADE IN THE USA

CATALOG #:

PROJECT:

TYPE:

LDL23R

2″ X 3" RECESSED LINEAR FIXTURE

DESCRIPTION: The LDL23R is a 2″x3″ linear fixture designed for use in a wide variety of uses, including corridors, lobbies, office areas and more. This is a unique and compact fixture with a complete array of options. These can be installed individually or in continuous runs. Plus our snap-in lens does a great job of hiding internal components.

CONSTRUCTION: Die-formed and wleded 22-gauge cold rolled steel with knockouts on each end. Housing is designed for direct lighting (a direct-indirect fixture in the same size is available as LDL23RDID)

OPTICAL SYSTEM: High output LED's available in 3000K, 3500K, 4000K, and 5000K. CRI >82 with 90 CRI as an option. Standard satin lens provides a beautiful architectural design while maintaining optimal light output.

ELECTRICAL SYSTEM: Our LDL23R achieves 80% LED lumen maintenance at 60,000 hours using long-life LEDs. Coupled with high-efficiency drivers, this luminaire provides superior illumination and an extended service life. Electronic drivers are available for 120/277V applications, 0-10v dimming standard. Metal gear tray for internal LED driver. Complies with federal energy efficiency standards.

MOUNTING: This fixture is designed to be recessed mounted. Continuous run available.

LISTINGS: Independently tested to IESNA LM-79 and LM-80 specifications. UL and cUL Listed.

WARRANTY: 5-Year Full Replacement Warranty.

Ordering Information on Next Page ►

ADVANTAGE ENVIRONMENTAL LIGHTING

CATALOG #:

PROJECT:

TYPE:

ORDERING INFORMATION. Example: LDL23R-4-40-10L-L-S-GT2-W-M

SERIES	LENGTH		CCT		OUTPUT		MOUNTING		LENS		GRID OPTIONS	
LDL23R	2	2 ft.	30	3000K	5L	500 lm/ft	L	Lay-in Grid	S	Satin Lens	GT1	15/16 Flat T-Bar
	3	3 ft.	35	3500K	7L	700 lm/ft	F	Flanged			GT2	9/16 Flat T-Bar
	4	4 ft.	40	4000K	10L	1000 lm/ft	FT	Flangeless Trim			GT3	15/16 Flat T-Bar w/Tegular Tiles
	5	5 ft.	50	5000K	14L	1400 lm/ft					GT4	9/16 Flat T-Bar w/Tegular Tiles
	6	6 ft.			XXXL	XXX lm/ft					GT5	9/16 Slot Grid
	7	7 ft.										
	8	8 ft.										
	XX	XX ft.										

FINISH		VOLTAGE		DRIVER OPTIONS		DRIVER OPTIONS	
W	Matte White	M	Multi-Volt (120-277V)	(BLANK)	0-10V 10% dimming driver	14EBL	14 Watt Emergency Ballast
SP	Special Finish			CD1	0-10V 1% dimming driver	90V	Degree Ceiling-to-Wall
				CD5	0-10V 5% dimming driver	90H	90 Degree Suspended
				EDN	Non-dimming electronic driver	XXV	XX Degree Ceiling-to-Wall
				DALI	1% Dali Dimming Driver	XXH	XX Degree Suspended
				LDE1	Lutron Hi-Lume 1% EcoSystem LED Driver		
				PSQ02U	Lutron T-Series 1% 2-Channel Tunable White		
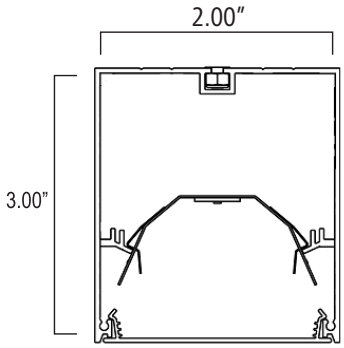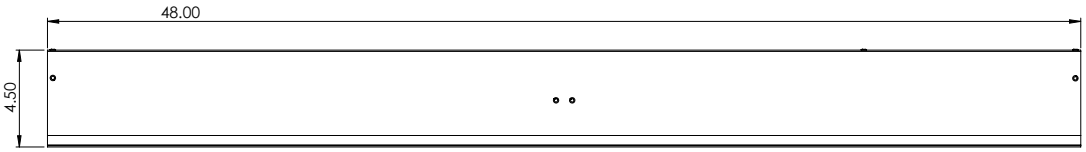
DIMENSIONS