ADVANTAGE ENVIRONMENTAL LIGHTING

MADE IN THE USA

CATALOG #:

PROJECT:

TYPE:

LCF

CORNER SURFACE MOUNT LED LUMINAIRE

The LCF Series is an architecturally designed surface mount LED fixture. It is available for continuous run mounting. The LCF utilizes the latest in LED technology to deliver high efficacy lumen output and a long lifespan.

APPLICATIONS: The LCF Series is designed to be a high quality, energy efficient LED fixtures for use in corridors, stairwells, dormitories and other applications with low ceiling height. The LCF Series is ideal for sports facilities, commercial or institutional applications.

CONSTRUCTION: The fixture is constructed of a 4" wide heavy gauge steel body. The fixture is available in any run length within 1' increments. Heavy duty housing crimped along sides for extra rigidity and straight alignment. Tamper-Proof screws available. Stainless Steel housing available.

OPTICAL SYSTEM: The fixture is provided with a precision formed, high efficiency reflector designed to direct the light downward and outward into usable horizontal illumination. The symmetrical reflector provides exceptional downward throw.

ELECTRICAL SYSTEM: Electronic drivers are available for 120/277V applications. Long-life LED system rated for >100K life hours (L70 @ 45°C). Complies with federal energy efficiency standards.

CONTROLS: The fixture is compatible with 0-10V dimming controls, 0-10V dimming driver included standard. 50% step dimming is available upon request.

MOUNTING: This fixture is designed for corner / wall / ceiling mounting, where the wall and ceiling meet.

LISTINGS: Independently tested to IESNA LM-79 and LM-80 specifications. UL and cUL Listed. Damp location rated. Made in Fort Worth, TX.

WARRANTY: 5-Year Limited Warranty. Complete warranty and terms located at **www.aelnow.com/warranty**.

Ordering Information on Next Page

ADVANTAGE ENVIRONMENTAL LIGHTING

CASTING NUMBER:	
PROJECT:	
TYPE:	

ORDERING INFORMATION

Example: LCF–2–35–25R–S–M–W–TPS

SERIES	LENGTH (FT.)	CCT	ILLUMINATION LEVEL	HOUSING/DOORFRAME	INNER LENS	OUTER LENS
LCF	2 2′	30 3000K	2L 2000 Lumens	B14 14 Gauge Cold Roll Steel	N No Lens	N No Lens
	4 4′	35 3500K	4.5L 4500 Lumens	B16 16 Gauge Cold Roll Steel	125C .125 Prismatic Acrylic (inverted)	125P .125 Clear Polycarbonate
	8 8′	40 4000K	8L 8000 Lumens	SH14 14 Gauge Stainless Steel	CP25 .125 Prismatic Polycarbonate	156P .156 Clear Polycarbonate
	XX Length in Ft.	50 5000K	11L 11000 Lumens	SH16 16 Gauge Stainless Steel	CP87 . 187 Prismatic Polycarbonate	187P .187 Clear Polycarbonate
			12L 12000 Lumens		TG . 156 Prismatic Tempered Glass	25P .250 Clear Polycarbonate
			13L 13000 Lumens		156C .156 Prismatic Acrylic (inverted)	375P .375 Clear Polycarbonate
			16L 16000 Lumens			F1 .187 Clear Tempered Glass
			XX Custom Lumens			G1 .250 Clear Tempered Glass
						H1 .375 Clear Tempered Glass
						J1 .500 Clear Tempered Glass

FINISH	VOLTAGE	DRIVER	OPTIONS
W White	M Multi-Volt (120-277V)	BLANK 0-10V 1% Dimming Driver (included standard)	14EBL 14 Watt Emergency Ballast
SP Custom		CD5 0-10V 5% to Off Dimming Driver	EC Emergency Circuit
AM Antimicrobal Paint		EDN Electronic Driver Non-Dimming	VDO Lutron Vive Integral RF controller with daylight and occupancy sensing.
		DALI 1% Dimming Driver	WL IP65 Rated
		LDE1 Lutron Hi-lume 1% EcoSystem LED driver with Soft-on, Fade-to-Black dimming technology	NL Night Light
			KOL Knockout Left Side1
			KOR Knockout Right Side1
			KO2 Knockouts Both Sides1
			90 90 CRI
			TDF Tethered door frame
			WL Wet Location
			IPH Full Length Internal Piano Hinge Door Frame

ENERGY AND PERFORMANCE DATA

INPUT VOLTAGE:	120/277VAC
SYSTEM INPUT POWER:	27.7 - 104 WATTS*
DELIVERED LUMEN OUTPUT:	4000- 15000 LUMENS
STANDARD DIMMING CONTROL:	0-10V
CCT:	3000, 3500, 4000, 5000 KELVIN
CRI:	82 (MINIMUM)
LIFE TIME RATING:	>100,000 HRS @ L70
INPUT FREQUENCY:	50/60 HZ
POWER FACTOR:	>0.9
OPERATING TEMP:	-30° TO 50° C

*ACTUAL WATTAGE MAY DIFFER BY ±5% WHILE OPERATING 120/277V ±10%

APPROXIMATE COLOR TEMPERATURE MULTIPLIER		
5000K	X	1.03
4000K	X	1
3500K	X	.97
3000K	X	.94
2700K	X	.91

PART#	DELIVERED LUMENS	WATTS	L70 @20C (HRS)
4L	4000 LUMENS	27.7	>100K
7L	7000 LUMENS	48.5	>100K
11L	11000 LUMENS	76.1	>100K
12L	12000 LUME	83.2	>100K
13L	13000 LUMENS	90.1	>100K
15L	15000 LUMENS	104	>100K

ADVANTAGE ENVIRONMENTAL LIGHTING

CASTING NUMBER:	
PROJECT:	
TYPE:	

DIMENSIONS

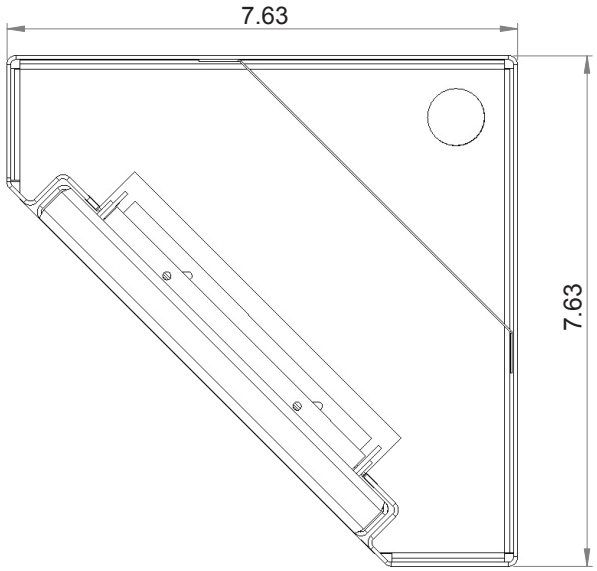

MOUNTING DIMENSIONS

2′

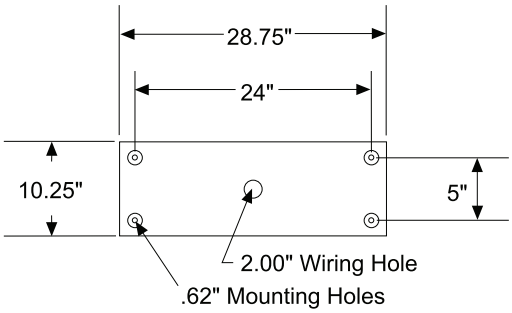

3′

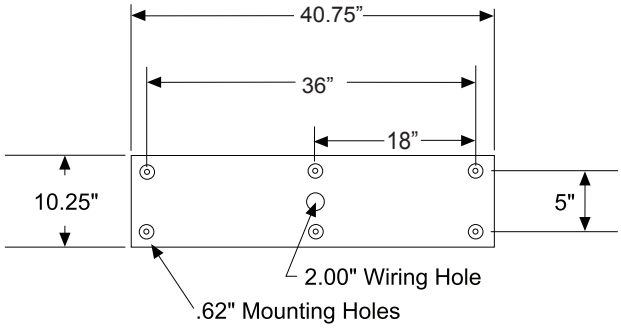
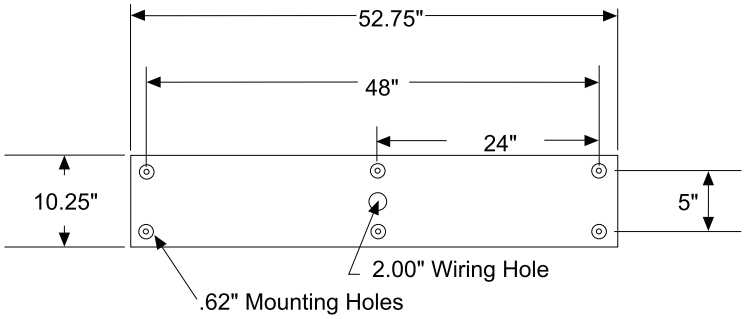
4′