ADVANTAGE ENVIRONMENTAL LIGHTING

MADE IN THE USA

CATALOG #:

PROJECT:

TYPE:

LBTN UNDER CABINET LUMINAIRE

PRODUCT SPECIFICATIONS

DESCRIPTION: The **LBTN** Series is an LED under cabinet that provides a uniform light distribution and LED diffusion to reduce eye strain of healthcare professionals. Designed with quality, efficacy, and long-lifespan in mind to cut hospital maintenance costs.

APPLICATIONS: The LBTN series of LED under cabinet fixtures are designed to be high quality, energy efficient under cabinet luminaires for healthcare applications.

CONSTRUCTION: The fixture is constructed of a structurally embossed, heavy gauge, cold rolled steel.

OPTICAL SYSTEM: Ribbed white acrylic or two-toned opaque front acrylic lens options. White pre-painted polyester polymer finish with a high reflectivity. Antimicrobial paint available.

ELECTRICAL SYSTEM: Electronic drivers are available for 120/277V applications. Long-life LED system rated for >100K life hours (L70 @ 45°C). Metal gear tray for internal LED driver. Complies with federal energy efficiency standards.

MOUNTING: Units are designed for under cabinet mounting.

LISTINGS: UL and cUL Listed. Damp location rated.

WARRANTY: 5 Year Limited Warranty on housing and electronics. Complete warranty and terms located at: **www.aelnow.com/warranty.**

ORDERING INFORMATION

Example: LBTN-40-S-RWA-M-W-46

SERIES	COLOR TEMP	ILLUMINATION	LENS	VOLTAGE	COLOR	LENGTH
LBTN	27 2700K 30 3000K 35 3500K 40 4000K 50 5000K	500L 500 lumens 750L 750 Lumens 1000L 1000 Lumens 1500L 1500 Lumens 2000L 2000 Lumens 2500L 2500 Lumens 3000L 3000 Lumens 3750L 3750 Lumens 4300L 4300 Lumens 5000L 5000 Lumens 6000L 6000 Lumens (MAX) XXXXL Custom Lumens	FA Frosted Linear Acrylic	M Multi-Volt (120-277VAC)	W White SP Custom	12 12 3/16" 22 22-19/32" 24 24-7/16" 34 34-7/16" 46 46-7/32"

46" UNIT, 34" UNIT, 24" UNIT, 22" UNIT, 12" UNIT

Delivered lumens vary based on length of unit. Consult factory for more info.

OPTIONS	PULL CHAIN OPTION	OUTLET OPTIONS
AM Antimicrobial Paint 90 90 CRI	PC Pull Chain RS Rocker Switch	CO Convenience Outlet

ADVANTAGE ENVIRONMENTAL LIGHTING

CATALOG #:

PROJECT:

TYPE:

LBTN UNDER CABINET LUMINAIRE

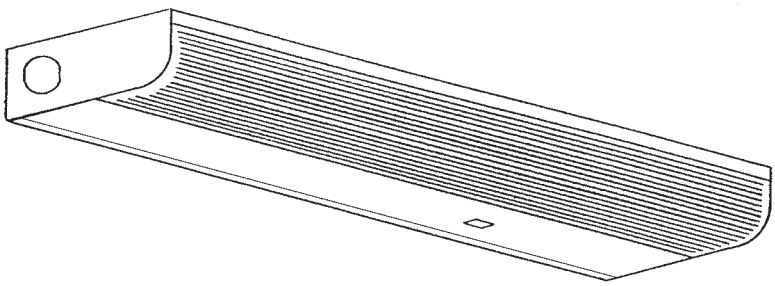

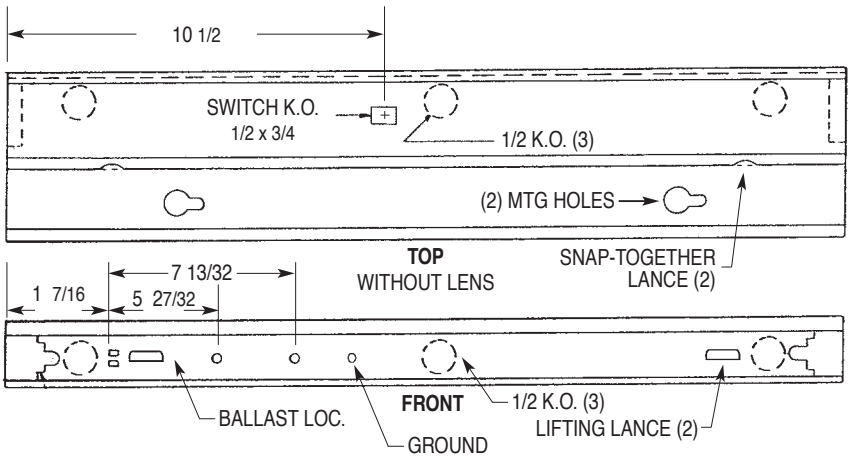

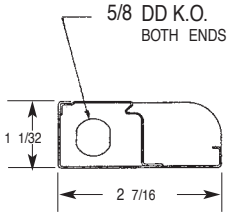

END VIEW

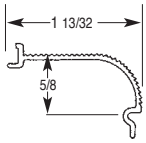

LENS
Frosted Linear Acrylic

OUTPUT	DELIVERED LUMENS	SYSTEM WATTAGE	L70 @ 45C (HRS)
500L	500 LUMENS	3.1	>100K
750L	750 LUMENS	4.7	>100K
1000L	1000 LUMENS	6.2	>100K
1500L	1500 LUMENS	9.3	>100K
2000L	2000 LUMENS	12.5	>100K
2500L	2500 LUMENS	15.6	>100K
3000L	3000 LUMENS	18.7	>100K
3750L	3750 LUMENS	23.4	>100K
4300L	4300 LUMENS	26.8	>100K
5000L	5000 LUMENS	31.2	>100K
6000L	6000 LUMENS (MAX)	37.5	>100K

ENERGY AND PERFORMANCE DATA

INPUT VOLTAGE	120/277VAC
SYSTEM INPUT POWER	3.1 TO 37.5 WATTS*
DELIVERED LUMEN OUTPUT	500 - 6000 LUMENS
STANDARD DIMMING CONTROL	0-10V
CCT	3000, 3500, 4000, 5000, KELVIN
CRI	80 (MINIMUM)
LIFE TIME RATING	100,000 HRS @ L70
INPUT FREQUENCY	50/60 HZ
POWER FACTOR	>0.9
OPERATING TEMP	-20° TO 40° C

*ACTUAL WATTAGE MAY DIFFER BY ± 5% WHILE OPERATING 120/277 V ± 10%