Advantage. Environmental Lighting

| CATALOG NUMBER |
|---|
| PROJECT |
| TYPE |

# LAZPDI

## Direct/Indirect LED Louvered Pendant Mount

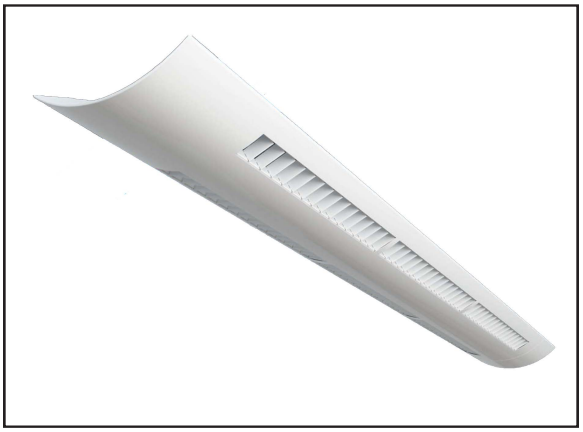

| STANDARD | OPTIONAL |
|---|---|
| PROUDLY MADE IN USA | LUTRON |

*PRODUCT SPECIFICATIONS*

### DESCRIPTION
The LAZPDI Series is an LED Pendant Mount Direct and Indirect Linear fixture available available for stand-alone or continuous run applications.

### APPLICATIONS
The LAZPDI Series were designed to be high quality and energy efficient LED architectural suspended for use in corridors, offices, government facilities, schools, and public areas.

### CONSTRUCTION
The fixture is constructed of a heavy gauge cold rolled steel body. Units are shipped with die cast aluminum joiners installed for structural continuity and for attaching other units for continual runs or end caps. Architectural ends. There are two die cast aluminum designs available, “spade” and “bullnose” configurations. They are bolted to the die cast joiners for a complete architectural look.

### LOUVERS
Side louvers are available in white and semi-specular. Louvers allow LED output to go through at a 45 degree angle, producing a beautiful light output.

### ELECTRICAL SYSTEM
Electronic drivers are available for 120/277V applications, 0-10V dimming included standard. Long-life LED system rated for >100K life hours (L70 @ 25°C). CRI >82. Complies with federal energy efficiency standards.

### MOUNTING
Designed to mount on exact 4 foot and 8 foot centers. Joiners will accept stems, single cable and power cords as supplied by others.

### LISTINGS
ETL and cETL Listed. Damp location rated.

### WARRANTY
5-Year Limited Warranty. Complete warranty and terms located at www.aelnow.com/warranty.

## ORDERING INFORMATION
Example: LAZPDI-40-HM-20/80-W-M-8-ECS

| SERIES | CCT | | OUTPUT | | UP/DOWN DISTRIBUTION* | | LOUVERS | | VOLTAGE | | ROW LENGTH | |
|---|---|---|---|---|---|---|---|---|---|---|---|---|
| LAZPDI | 30 | 3000K | SL | Standard Low | 0/100 | 0% Up/100% Down | W | White | M | Multi-Volt (120/277VAC) | 4 | 4' |
| | 35 | 3500K | ML | Medium Low | 10/90 | 10% Up/90% Down | | | | | 8 | 8' |
| | 40 | 4000K | HL | High Low | 20/80 | 20% Up/80% Down | | | | | XX | Specify Row Length (in Ft) |
| | 50 | 5000K | SM | Standard Medium | 30/70 | 30% Up/70% Down | | | | | | |
| | | | MM | Medium Medium | 40/60 | 40% Up/60% Down | | | | | | |
| | | | HM | High Medium | 50/50 | 50% Up/50% Down | | | | | | |
| | | | | | 60/40 | 60% Up/40% Down | | | | | | |
| | | | | | 70/30 | 70% Up/30% Down | | | | | | |
| | | | | | 80/20 | 80% Up/20% Down | | | | | | |
| | | | | | 90/10 | 90% Up/10% Down | | | | | | |
| | | | | | 100/0 | 100% Up/0% Down | | | | | | |

*For Custom Up/Down Distributions, Replace Up/Down with Desired Distribution.

| END CAP | | DRIVER OPTIONS | | OPTIONS | | HARNESS OPTIONS | | HANGING OPTIONS | |
|---|---|---|---|---|---|---|---|---|---|
| ECS | Spade Nose | BLANK | 0-10V Dimming Driver (included standard) | 12EBL | 1200 Lumen Emergency Ballast | WH34 | 3-Wire 4' | CP50 | Cord Pendant (No Power Feed) 50' |
| ECB | Bull Nose | CD1 | 0-10V 1% to Off Dimming Driver | VDO | Lutron Vive Integral RF controller with daylight and occupancy sensing | WH44 | 4-Wire 4' | CP100 | Cord Pendant (No Power Feed) 100' |
| | | CD5 | 0-10V 5% to Off Dimming Driver | | | WH54 | 5-Wire 4' | CPPF50 | Cord Pendant (Power Feed Capable) 50' |
| | | EDN | Electronic Driver Non-Dimming | FCJS0 | Lutron Vive attached RF fixture controller for 0-10V drivers. | WH38 | 3-Wire 8' | CPPF100 | Cord Pendant (Power Feed Capable) 100' |
| | | FLDD | Fifth Light Dali, Dimming | | | WH48 | 4-Wire 8' | RPXX | Rigid Pendant (Power Feed Capable) |
| | | LDE1 | Lutron Hi-lume 1% EcoSystem LED driver with Soft-on, Fade-to-Black dimming technology | AC10 | 10' Aircraft Cable Set | WH58 | 5-Wire 8' | | Specify Pendant Length (XX) |
| | | | | OCC | Occupancy Sensor | | | | |
| | | LDE5 | Lutron LDE5 5-Series Ecosystem 5% Dimming | | | | | | |

## FIXTURE DIMENSIONS

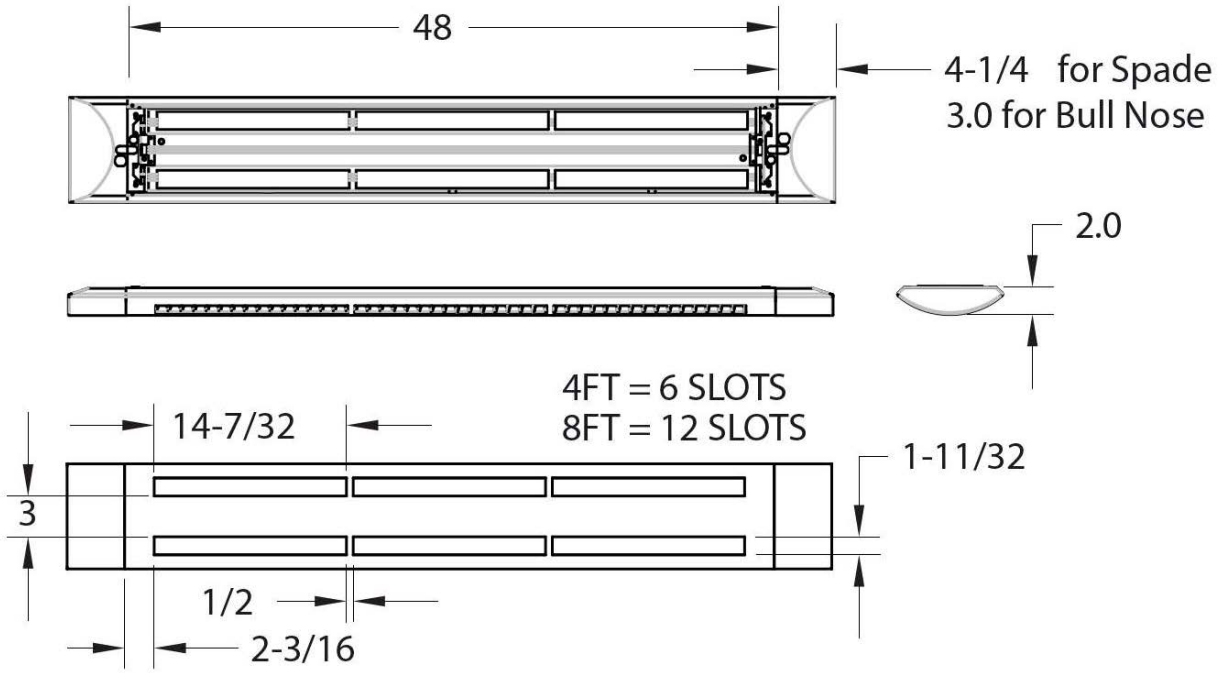


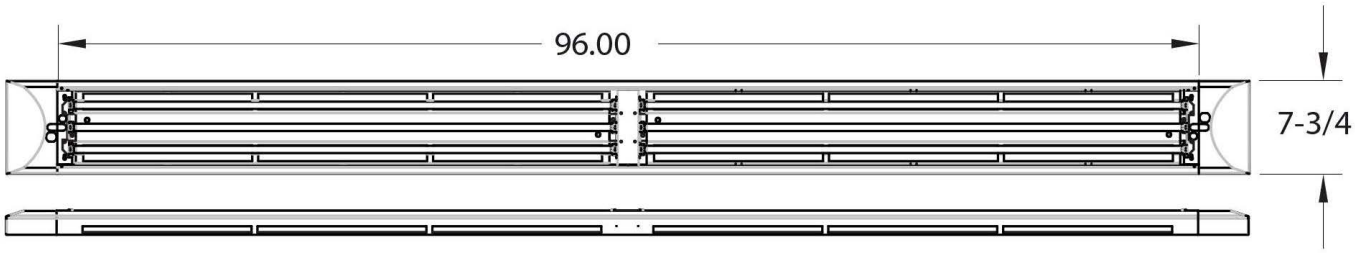


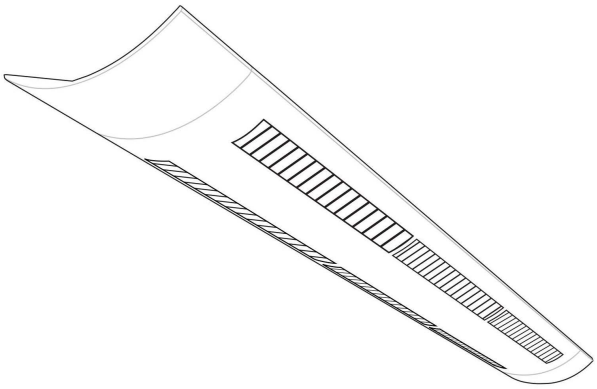

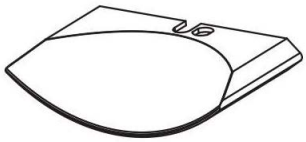

SPADE

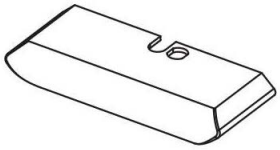

BULL NOSE

## LED SYSTEM DATA

| Output | Delivered Lumens | System Wattage | L70 (hrs) |
|---|---|---|---|
| SL | 4650 | 33 | >100K |
| ML | 7974 | 57 | >100K |
| HL | 11150 | 80 | >100K |
| SM | 12040 | 86 | >100K |
| MM | 13016 | 93 | >100K |
| HM | 15728 | 112 | >100K |

* Delivered Lumens shown were tested with 4000K LEDs

| Approximate Color Temperature Multiplier | |
|---|---|
| 5000K | 1.03 |
| 4000K | 1 |
| 3500K | 0.97 |
| 3000K | 0.94 |
| 2700K | 0.91 |

| Energy and Performance Data | |
|---|---|
| Input Voltage | 120/277 VAC |
| Standard Dimming Control | 0-10V |
| CCT | 3000, 3500, 4000, 5000 Kelvin |
| CRI | 82 (minimum) |
| Lifetime Rating | >100,000 Hours at L70 |
| Input Frequency | 50/60Hz |
| Power Factor | >0.9 |
| Operating Temp | Low Ambient -20°C/ High Ambient 50°C |

## HANGING OPTIONS

**CP**

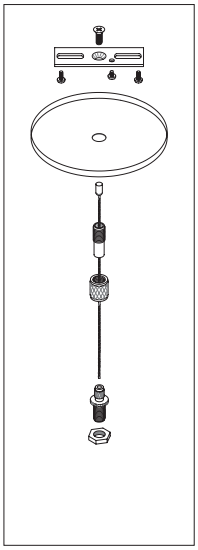

**Cord Pendant (No Power Feed)**

**CPPF**

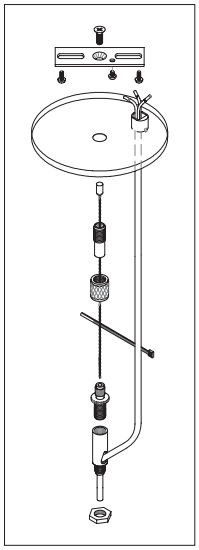

**Cord Pendant (Power Feed Capable)**

**RP**

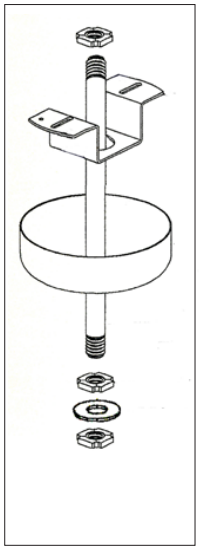

**Rigid Pendant (Power Feed Capable)**

© 2020 Advantage Environmental Lighting, Inc. All rights reserved. For informational purposes only. Specifications are subject to change without notice. See www.aelnow.com for the most current fixture specifications available.