ADVANTAGE ENVIRONMENTAL LIGHTING

MADE IN THE USA

CATALOG #:

PROJECT:

TYPE:

LALPPDI LOUVERED AND PERFORATED DIRECT AND INDIRECT LED PENDANT MOUNT

PRODUCT SPECIFICATIONS

The **LALPPDI** Series is an LED Pendant Mount Direct and Indirect Linear fixture available available for stand-alone or continuous run applications.

APPLICATIONS: The LALPPDI Series were designed to be high quality, energy efficient LED fixtures for use in corridors, offices, government facilities, schools, and public areas.

CONSTRUCTION: The fixture is constructed of a heavy gauge cold rolled steel body. Scoop end cap adds a sleek, finished, architectural look to the luminaire.

OPTICAL SYSTEM: Satin lens, or middle baffle with no lens options available. Uplight provides a distribution that produces a very wide distribution for even ceiling brightness with mounting from 12 to 18 inches from the ceiling.

ELECTRICAL SYSTEM: Unit comes witha a separate circuit for up/down light, allowing a wide range of adjustment capabilities. Electronic drivers are available for 120/277V applications, 0-10V dimming included standard. Long-life LED system rated for >100K life hours (L70 @ 45°C). Metal gear tray for internal LED driver. Complies with federal energy efficiency standards.

MOUNTING: Designed to mount on exact 4 foot and 8 foot centers. Continuous run available, specify entire run length when ordering for Row Length.

LISTINGS: UL and cUL Listed. Damp location rated.

WARRANTY: 5-Year Limited Warranty. Complete warranty and terms located at www.aelnow.com/warranty

Ordering Example: LALPPDI-30-S-30-S-WP-SL-M

SERIES	UP/DOWN DISTRIBUTION		CCT UP		OUTPUT UP		CCT DOWN		OUTPUT DOWN		BODY STYLE		LENS OPTION	
LALPPDI	0/100	0% Up/100% Down	30	3000K	S	Standard	30	3000K	S	Standard	WP	Wide Side Perforation	SL	No Baffle Satin Lens
	10/90	10% Up/90% Down	35	3500K	HS	High Standard	35	3500K	HS	High Standard	WOP	Without Side Perforation	B	Middle Baffle, No Lens
	20/80	20% Up/80% Down	40	4000K	M	Medium	40	4000K	M	Medium				
	30/70	30% Up/70% Down	50	5000K	HM	High Medium	50	5000K	HM	High Medium				
	40/60	40% Up/60% Down												
	50/50	50% Up/50% Down												
	60/40	60% Up/40% Down												
	70/30	70% Up/30% Down												
	80/20	80% Up/20% Down												
	90/10	90% Up/10% Down												
	100/0	100% Up/0% Down												

ROW LENGTH		DRIVER OPTIONS		OPTIONS		HANGING OPTIONS	
4	4'	BLANK	0-10V Dimming Driver (included standard)	12EBL	1200 Lumen Emergency Ballast	CP100	Cord Pendant (No Power Feed) 100'
8	8'	CD1	0-10V 1% to Off Dimming Driver	VDO	Lutron Vive Integral fixture control (RF with Daylight and Occupancy Sensing)	CP120	Cord Pendant (No Power Feed) 120'
XX	Specify Row Length (in Ft)	CD5	0-10V 5% to Off Dimming Driver	FCJ50	Lutron Vive Attached Fixture Control (RF Only for 0-10V Drivers)	CPPF120	Cord Pendant (Power Feed Capable) 100'
		EDN	Electronic Driver Non-Dimming			CPPF120	Cord Pendant (Power Feed Capable) 120'
		DALI	DALI Dimming Driver			RPXX	Rigid Pendant (Power Feed Capable) Specify Pendant Length (XX)
		LDE1	Lutron Hi-lume 1% EcoSystem LED driver with Soft-on, Fade-to-Black dimming technology				
		LDE5	Lutron LDE5 5-Series Ecosystem 5% Dimming				

ADVANTAGE ENVIRONMENTAL LIGHTING

CATALOG #:

PROJECT:

TYPE:

FIXTURE DIMENSIONS

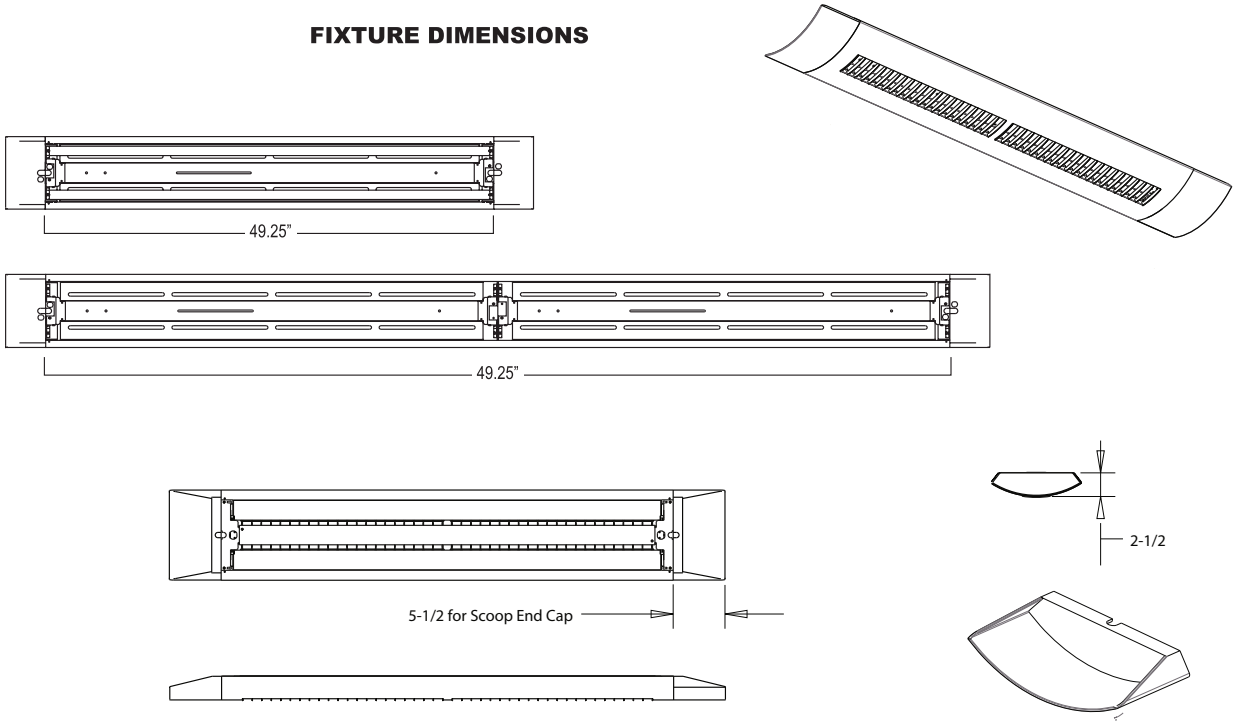

ROW CONFIGURATIONS

Advantage would like to double check your Bill of Material upon placement of your order if the number of rows and their indivdual row lengths are provided on the purchase order as follows:

Row 1 - 8’
Row 2 - 8’
Row 3 - 24’
Row 4 - 24’

Please provide any additional pertinent information such as additional power drops required mid-row.

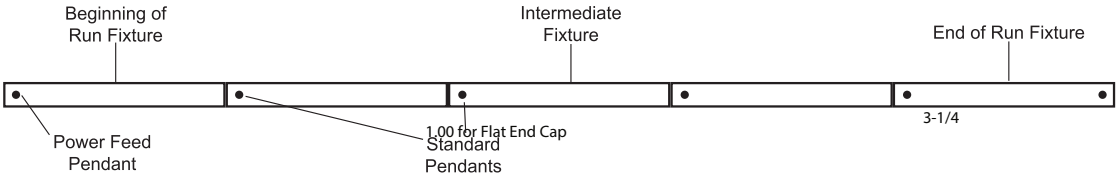

	Row Length	4’	8’	12’	16’	20’	24’	28’	32’	36’	40’	44’	48’
Fixture Length	4’	1		1		1		1		1		1	
	8’		1	1	2	2	3	3	4	4	5	5	6
Total Pendants Needed		2	2	3	3	4	4	5	5	6	6	7	7

ENERGY AND PERFORMANCE DATA

Input Voltage	120/277 VAC
Standard Dimming Control	0-10V
CCT	3000, 3500, 4000, 5000 Kelvin
CRI	82 (minimum)
Life Time Rating	>100,000 hrs at L70
Input Frequency	50/60Hz
Power Factor	>0.9
Operating Temp	Low Ambient -20*C/ High Ambient 50*C

ADVANTAGE ENVIRONMENTAL LIGHTING

CATALOG #:

PROJECT:

TYPE:

LED SYSTEM DATA

Output	Delivered Lumens Per Foot	System Wattage Per Foot	CRI	LPW
Standard	506 Lm/Ft	3.3	82	148
High Standard	709 Lm/Ft	5.1	82	139
Medium	965 Lm/Ft	6.9	82	140
High Medium	1,468 Lm/Ft	10.3	82	143

Additional Lumen options available add desired lumens to end of part #
e.g. LALPPDI40MSMW43500

Quick reference Output Guide Standard		
Length	**Lumens**	**Wattage**
2 Foot	1012	6.6
3 Foot	1518	9.9
4 Foot	2024	13.2
6 Foot	3036	19.8
8 Foot	4048	26.4

Quick reference Output Guide High Standard		
Length	**Lumens**	**Wattage**
2 Foot	1418	10.2
3 Foot	2127	15.3
4 Foot	2836	20.4
6 Foot	4254	30.6
8 Foot	5672	40.8

Quick reference Output Guide Medium		
Length	**Lumens**	**Wattage**
2 Foot	1930	13.8
3 Foot	2895	20.7
4 Foot	3860	27.6
6 Foot	5790	41.4
8 Foot	7720	55.2

Quick reference Output Guide High Medium		
Length	**Lumens**	**Wattage**
2 Foot	2936	20.6
3 Foot	4404	30.9
4 Foot	5872	41.2
6 Foot	8808	61.8
8 Foot	11744	82.4

PENDANT ORDERING DETAIL

A standard mounting pendant is needed for each fixture, plus one pendant with power feed capability per continuous row or circuit. Contact your Advantage representative for additional information.

Pendant		Length	
RP	Rigid Pendant (Power Feed Capable)	**XX**	Specify Pendant Length (Replace "XX" with Row Length. Must Be Ordered in 1' Increments)
CP	Cord Pendant (No Power Feed)		
CPPF	Cord Pendant (Power Feed Capable)		

CP

CPPF

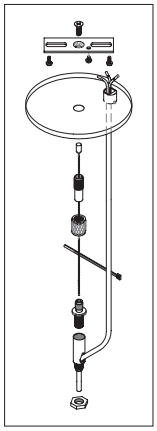
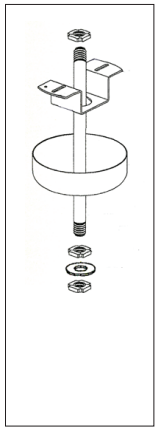
RP