TEXAS FLUORESCENTS
2055 LUNA RD SUITE 142 | CARROLTON TX, 75006
PH: 972-247-3171 | FAX:972-247-0200
SITE: WWW.TEXASFLUORESCENTS.COM

STEM MOUNTING KIT INSTALLATION INSTRUCTIONS

WARNING: *Risk of fire and electrical shock. This product must be installed in accordance with the applicable installation code by a person familiar with the construction and operation of the production and the hazards involved*

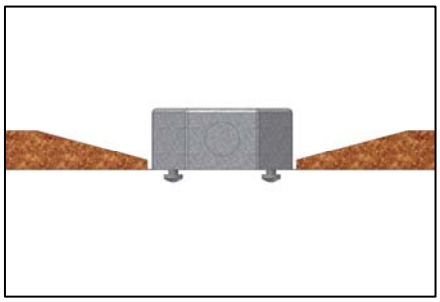

1. Secure the 4" octagonal junction box so that it is flush with ceiling level.

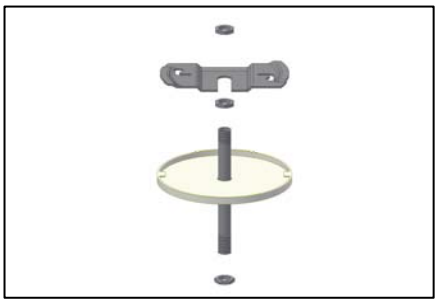

2a. Non-feed location - Securely fasten the mounting strap on to the stem at the 1/2" end. Place the stem through the canopy. Thread one nut on the other end of the stem.

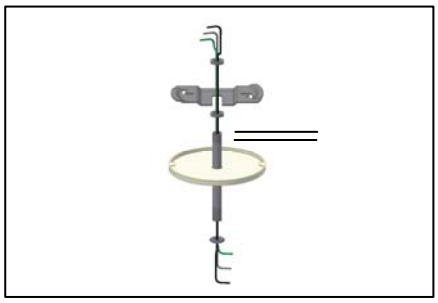

2b. At feed location - Securely fasten the mounting strap on to the stem at the 1/2" end. Place the stem through the canopy. Thread one nut on the other end of the stem. Insert the power wires wires through stem.

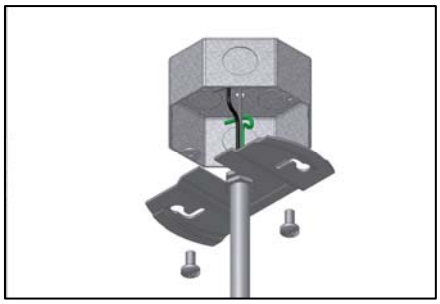

3. Raise stem set in position. Install the mounting strap to the junction box with two screws.

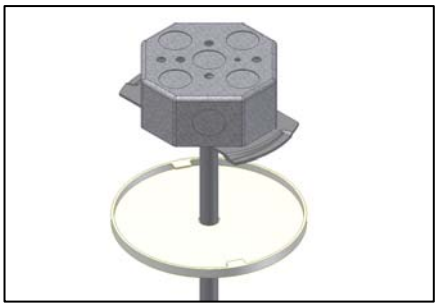

4a. Non-feed location - Raise the canopy in to place.

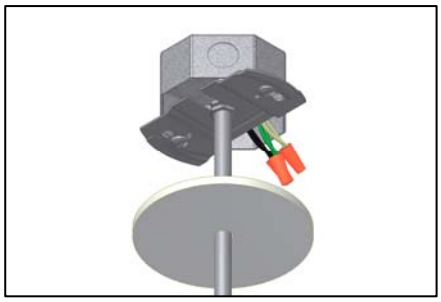

4b. At feed location - Splice the fixture power wires and building power wires together in the junction box. Wire in accordance with all local, state and national codes. Raise the canopy in to place.

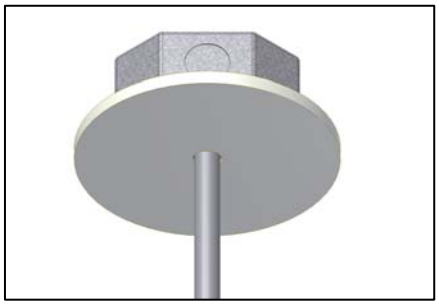

5. Twist the canopy clockwise onto the mounting strap securely to complete the installation.

COMPONENTS MAY VARY SLIGHTY