ADVANTAGE ENVIRONMENTAL LIGHTING

HB4F Door

INSTALLATION INSTRUCTIONS

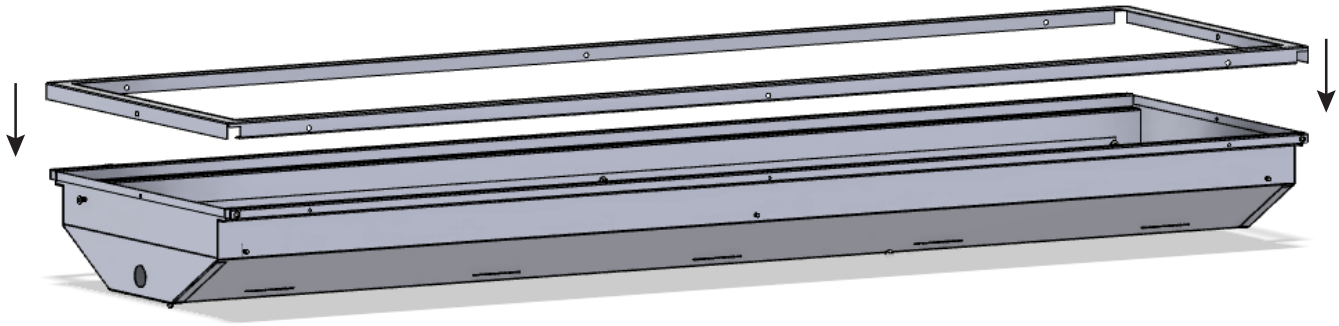

Place light on a flat surface. Lower door onto light unit.

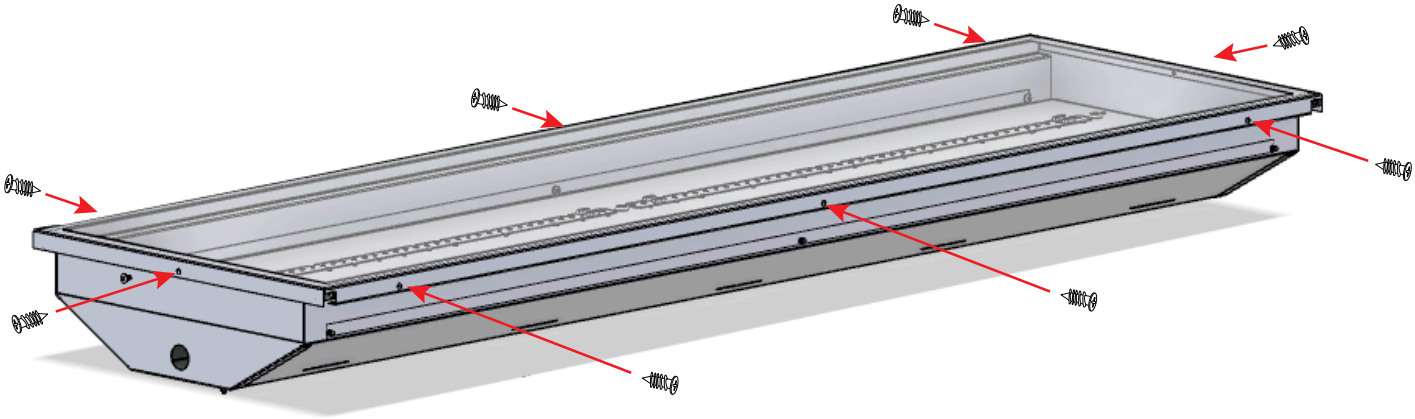

Fasten with eight (8) fasteners- 3 on each side and 1 on each end. Unit is already drilled to accomodate the fasteners. The fasteners are included with each door.