Advantage.
Environmental Lighting

RECESSED FIREBOX TROFFER

FBX22

FBX24

Model Number	Inside Height	Outside Width	Outside Length
FBX22	5″	27″	29″
FBX24	5″	28″	52″
FBX14	5″	16″	52″

Performance Data

For Use:

- UL Classified to maintain the fire rating (1 hour) for the following fire-rated assemblies: A202, D203, D216, D219, G205, G208, G218, G252, G255, G256, G262,G264, J201, J202, L006, L201, L202, L206, L209, L210, P202, P204, P206, P207, P210, P211, P213, P214,P216, P225, P227, P228, P229, P230, P231, P235, P238, P242, P246, P250, P251, P254, P255, P259, P260, P261, P264, P265, P267, P268, P269

CLASSIFIED FOR FIRE RESISTANCE
FIRE RESISTANCE CLASSIFICATION
SEE UL FIRE RESISTANCE DIRECTORY

General Information

Benefits:

60 minute protection.

Fits most fluorescent fixtures.

Compatible with lay-in tile ceilings.

Easy Installation

No additional screws, drilling or additional sealant required.

Reduces heat loss through the fixture.

Maintenance free.

Cable entry points can be made anywhere on fixture

PRODUCT DIMENSIONS

FBX22

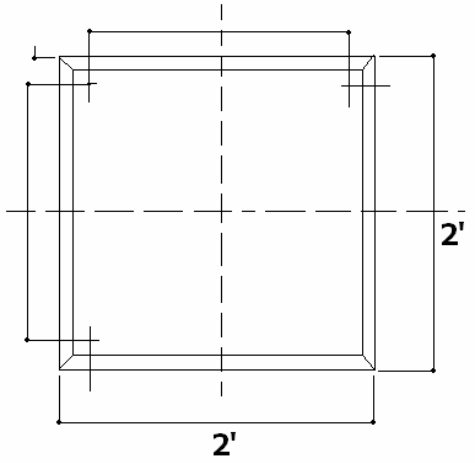

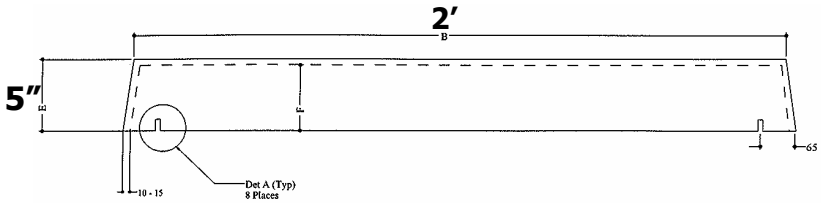

FBX24

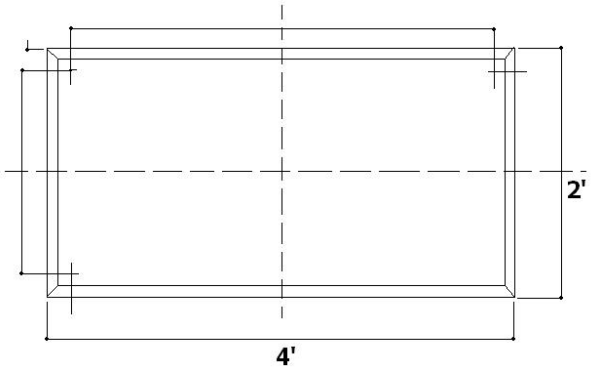

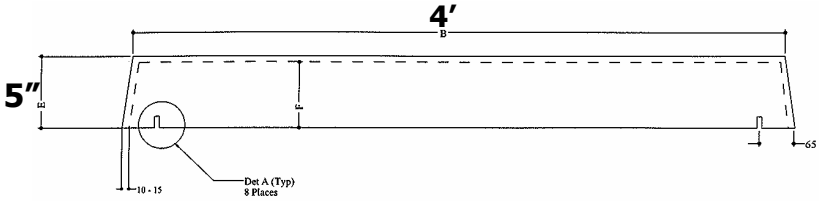
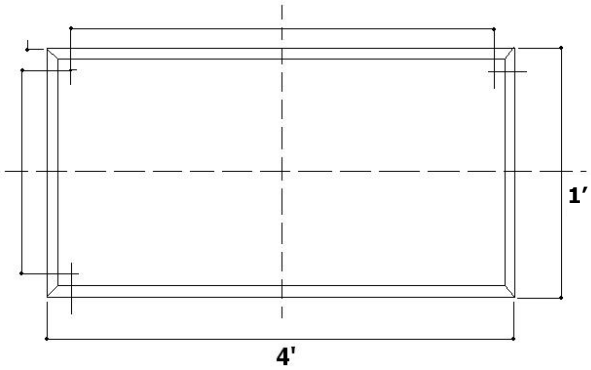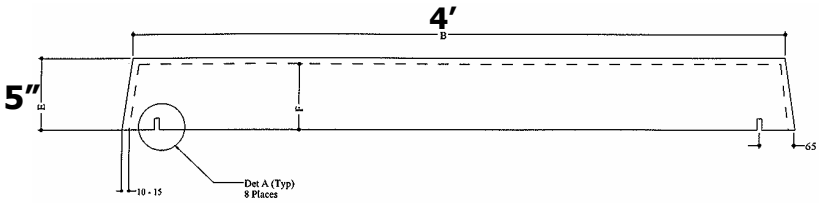
FBX14