C Series

LED Explosion Proof Light

C2

C

C3

Certifications:

- Marking ATEX
  - II2 G Ex db IIB T5/T6 Gb
  - II2 D Ex tb IIIC T80/90C Db IP66
- Marking IECEx
  - Ex db IIB T5/T6 Gb
  - Ex tb IIIC T80/90C Db IP66
- Marine Marking
  - UL 1598, UL1598A
  - ABS
- Marking UL844 (North American)
  - Class I, Division 1, Groups C,D
  - Class I, Division 2, Groups A,B,C,D
  - Class II, Division 1, Groups E,F,G
  - Class II, Division 2, Groups F,G
  - Class III
- IP66

Standard Materials:

- Housing: Copper-free aluminum
- Lens: Tempered glass
- Hardware: Stainless steel
- Mounting Bracket: Stainless steel

LED Explosion Proof Light - C Series

Key Features:

1. Dimmable and battery backup function is available.
2. High-quality SMT LED and Meanwell driver.
3. Heavy-duty and high impact resistance.
4. Replaceable LED board and drivers.
5. Integrated junction box for driver.
6. Marine rating powder coated finish treatment.
7. Various installation ways for different applications.
8. Glass lens or polycarbonate lens for making different beam angles.

Additional Features:

- Emergency battery backup is available.
- 5-year warranty.
- Working Temperature: -40°C to 60°C (-40°F to 140°F); ATEX & IECEx (IC solution): -40°C to 80°C (-40°F to 176°F).

Catalog Number Logic:

EX - xxxW - Cx Y Z D A

1 2 3 4 5 6 7

1 PRODUCT CATEGORY
- Explosion proof light

2 WATTAGE
- 20W-280W

3 PRODUCT SERIES
- C
- C2
- C3

4 DIMMING OPTION
- D= dimmable
- N= Non-dimmable

5 CCT
- From 2200K to 7000K
- 22=2200K, 30=3000K, ..., 70=7000K

6 BEAM ANGLE
- D40= 40°
- D90= 90°
- D60= 60°
- D120= 120°

7 GLASS TYPE
- A=blank: Flat glass
- A=C: Spherical glass

LED Explosion Proof Light - C Series

Technical Data:

Model	Wattage	Operating Voltage	Lumens (lm)	Efficacy (lm/W)	CRI	CCT	Emergency Time
EX-20W C2YZDA	20W	AC100-277V/DC12-48V, AC200-480V	2,800	140	>70	2200K-7000K	3 hours
EX-40W C2YZDA	40W		5,600				
EX-60W C2YZDA	60W		8,400				
EX-80W C2YZDA	80W		11,200				
EX-100W CYZDA	100W		14,000				
EX-150W CYZDA	150W		21,000				
EX-200W C3YZDA	200W		28,000				
EX-250W C3YZDA	250W		35,000				
EX-280W C3YZDA	280W		39,200				

Dimensions:

C2 Series

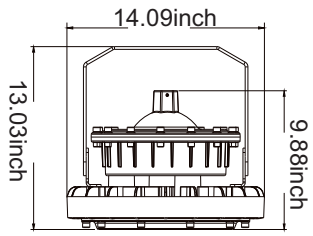

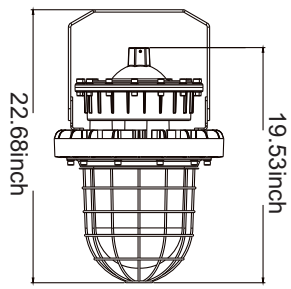

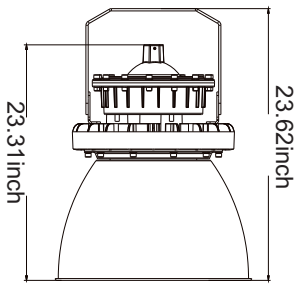

C Series

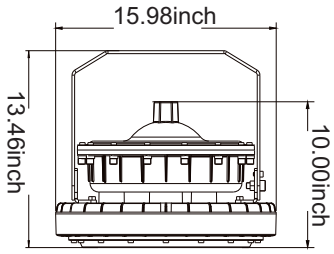

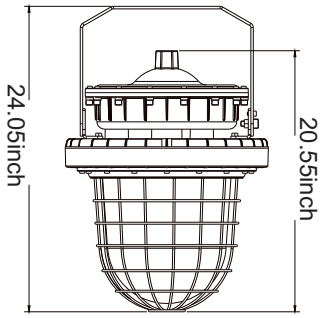

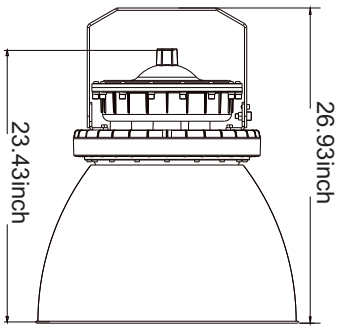

C3 Series

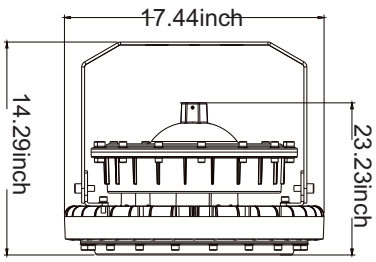

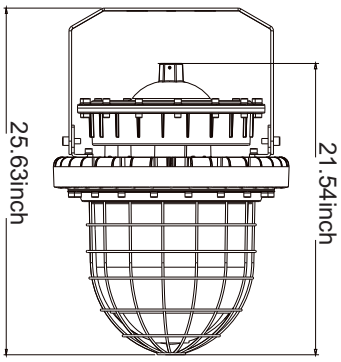

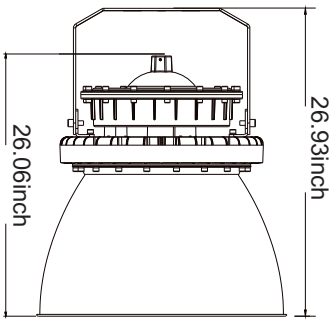

LED Explosion Proof Light - C Series

Photometry:

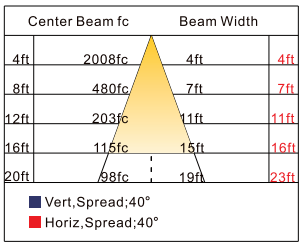

40°

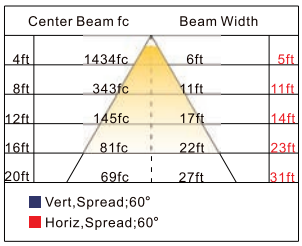

60°

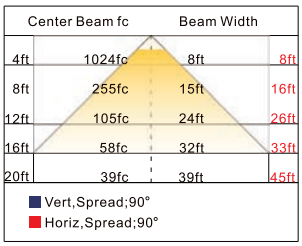

90°

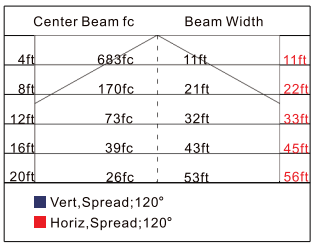

120°

Packing Information:

Model	Quantity/Carton	Packing Size	Net Weight	Gross Weight
C2	1 PCS	18.50x18.50x13.58inch	14 kg/ 30.86 lbs	16 kg/ 35.27 lbs
C	1 PCS	21.65x20.47x14.17inch	17.4 kg/ 38.36 lbs	19 kg/ 41.89 lbs
C3	1 PCS	21.85x21.85x13.58inch	21 kg/ 46.30 lbs	25 kg/ 55.12 lbs

Mounting Methods:

Ceiling Mounting:

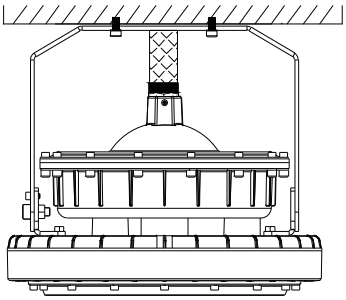

Wall Mounting:

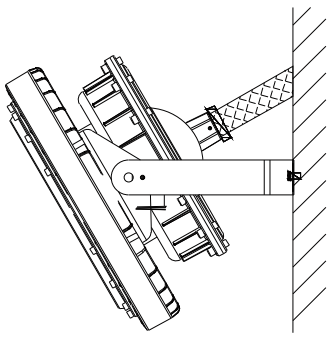

Hook Pendant Mounting:

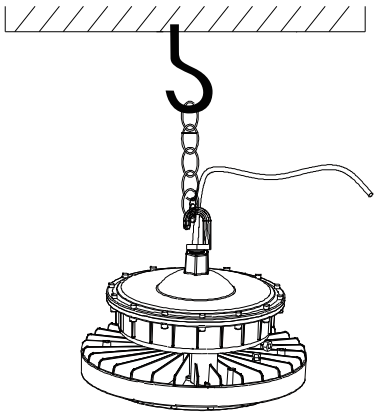

Wall Mounting to Junction Box:

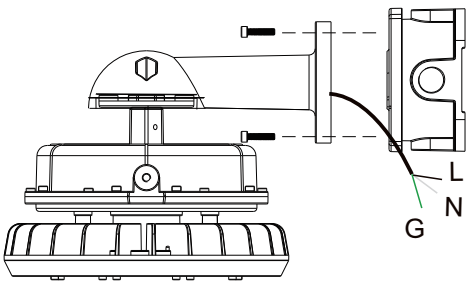

Pole Mounting:

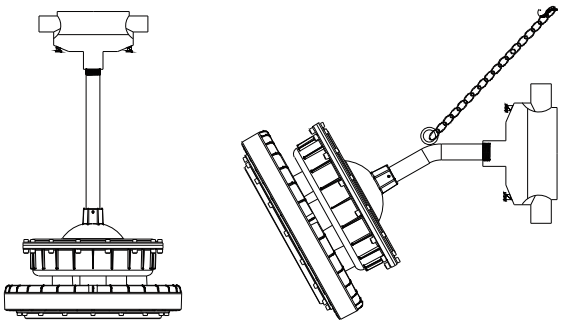

LED Explosion Proof Light - C Series

Accessories:

- Model: Ex-Junction Box
  Name: Junction Box
  Material: Aircraft Aluminum A383

- Model: Ex-25° Arm Support
  Name: 25° Arm Support
  Material: Aircraft Aluminum A356

- Model: Ex-D01
  Name: Pendant Direction Adapter
  Material: Aircraft Aluminum A383

- Model: EX-Bended Pipe
  Name: Bended Pipe
  Material: Iron

- Model: Ex-Lamp Shade
  Name: Lamp Shade
  Material: Aluminum A1070

- Model: Ex-Conduit 01
  Name: Metal Conduit
  Material: Stainless Steel and Aluminum

- Model: Ex-90° Arm Support
  Name: 90° Arm Support
  Material: Aircraft Aluminum A356

- Model: Ex-Lamp Shade
  Name: Cut o fflamp shade
  Material: Aluminum A1070

- Model: EX-Straight Pipe
  Name: Straight Pipe
  Material: Iron

- Model: EX-Hook
  Name: Installation Hook
  Material: Aircraft Aluminum A383

- Model: Ex-Chain
  Name: Pendant Chain
  Material: Stainless Steel S30400

Application :

- Oil and gas industry
  - All petroleum production and refining
  - Petroleum loading and transportation
  - Petroleum storage and retail
  - LNG industry
  - All mining operations and service
- Ocean, marine and aerospace field
  - Ocean platform operation facilities
  - Aerospace clean room and production
  - Ocean vessel operations
- Food and alcohol industry
  - Flour and fine particle production and storage
  - Food and distilling production
  - Alcohol industry
- Chemical industry
  - All types of paint facilities
  - Chemical production and storage
- Metal treatment
  - Steel and aluminum factories
  - Pumping stations in any environment
  - Metal smelting, foundry and fabrication
- Other high humidity, high dust, high temperature, vapor locations.