Advantage Environmental Lighting

# EMR5

## Recessed LED Emergency Unit

*STANDARD*

### ILLUMINATION

- *Two fully adjustable 1.0W white LED lamp heads.*
- *High performance chrome-plated metal reflectors and plastic lens for optimal light distribution.*

### ELECTRICAL

- *Dual 120/277 voltage.*
- *Charge rate/power "ON" LED indicator light and push-to-test switch for mandated code compliance testing.*
- *LVD (low voltage disconnect) prevents battery from deep discharge.*
- *6V maintenance-free, rechargeable sealed lead acid battery.*
- *Internal solid-state transfer switch automatically connects the internal battery to lamp heads for minimum 90-minute emergency illumination.*
- *Fully automatic solid-state, two rate charger initiates battery charging to recharge a discharged battery in 24 hours.*
- *Remote capacity of 10W standard.*

### MOUNTING

- *Bar hangers on the back box for recessed mount.*
- *Compatible with drop ceiling mount installations. Bar hangers included.*

### HOUSING

- *Durable 20-gauge steel trim plate in white or black finish.*
- *Trim securely attached to housing with spring clips.*

### WARRANTY

- *Five year warranty on all electronics and housing. Battery pro rated for two years.*
- *Meets UL924, NFPA 101 Life Safety Code, NEC, OSHA, Local and State Codes.*
- *UL Listed for dry locations. (25°C)*

### DIMENSIONS

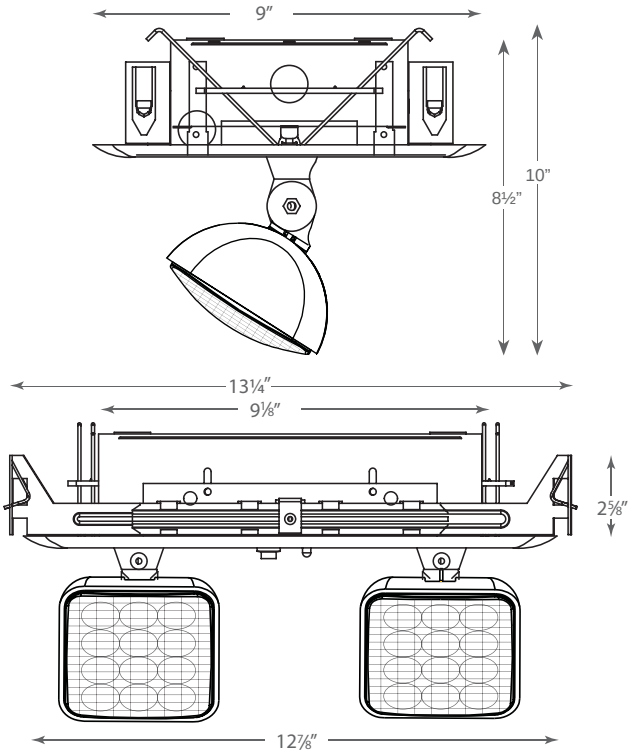


### ORDERING INFORMATION

*Special Voltage options available. Check with your AEL Representative*

| MODEL | HOUSING COLOR | |
|---|---|---|
| *EMR5* | *Blank* | *White* |
| | *B* | *Black* |

*Sample Part Number:* ***EMR5-B***

Advantage Environmental Lighting

# EMR5 Recessed LED Emergency Unit

## ELECTRICAL INFORMATION

| CATALOG NUMBER | INPUT WATTS (W) | | INPUT AMPS (A) | |
|---|---|---|---|---|
| | 120V | 277V | 120V | 277V |
| EMR5 | 5.0 | 5.0 | 0.05 | 0.03 |

## REMOTE LAMP COMPATIBILITY

| MODEL NUMBER | BATTERY | REMOTE CAPACITY | COMPATIBLE REMOTE HEAD FAMILY | | | | | | | | | | | | |
|---|---|---|---|---|---|---|---|---|---|---|---|---|---|---|---|
| | | | RHLED | | | RH16LED | RH16 | | RH | | RHR | | SRH | | SRHLED |
| | | | 3.6V | 9.6V | MV | | 6V | 12V | 6V | 12V | 6V | 12V | 6V | 12V | |
| EMR5 | 6V | 10W | | | X | X | X | | X | | X | | X | | X |