Advantage Environmental Lighting

EM24BAA

BAA Compliant Wet-Location Incandescent Emergency Unit

STANDARD	OPTIONAL
UL LISTED, WET, ASSEMBLED IN UNITED STATES	INTERNAL HEATER, REMOTE CAPACITY

ILLUMINATION

- *Adjustable, glare-free PAR-Type lamp heads with 7.2 watts incandescent wedge base lamps.*
- *Sealed and gasketed weather proof lamp heads with high performance chrome-plated metalized reflector and tempered glass lenses.*

ELECTRICAL

- *Dual 120/277 voltage.*
- *Charge rate/power "ON" LED indicator light and push-to-test switch for mandated code compliance testing.*
- *LVD (low voltage disconnect) prevents battery from deep discharge.*
- *6V maintenance-free, rechargeable sealed lead acid battery.*
- *Internal solid-state transfer switch automatically connects the internal battery to lamp heads for minimum 90-minute emergency illumination.*
- *Fully automatic solid-state, two rate charger initiates battery charging to recharge a discharged battery in 24 hours.*

MOUNTING

- *External mounting brackets for simplified surface mounting provided.*

HOUSING

- *Corrosion-resistant 5VA flame retardant, UV-stabilized polycarbonate in gray finish.*
- *Sealed and gasketed housing with hinged cover.*
- *Sealed test switch.*
- *Integral breather vent.*

OPTIONS

- *HTR: Optional internal heater for cold temperature (-9°C – 40°C) applications.*
- *RC: Remote capacity of up to 14.4 watts.*

WARRANTY / LISTING

- *Five year warranty on all electronics and housing. Batteries are prorated warranted for two years.*
- *Meets UL924, NFPA 101 Life Safety Code, NEC, OSHA, Local and State Codes.*
- *UL Listed for wet locations (5°C – 40°C).*

DIMENSIONS

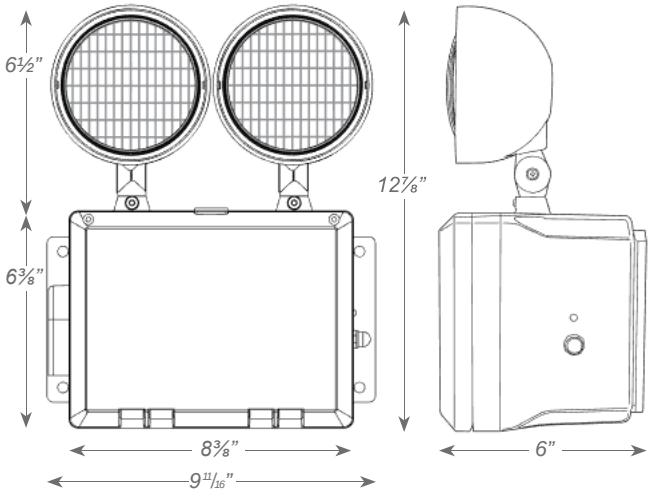

ORDERING INFORMATION

Special voltage options available. Check with your Advantage Representative.

Sample Part Number: **EM24BAA**

MODEL	OPTIONS	
EM24BAA	*HTR*	*Internal Heater*
	RC	*Remote Capacity*