Advantage. Environmental Lighting

EM22-16

MR-16 Emergency Unit

STANDARD	OPTIONAL
UL LISTED, DAMP	ALL LED, ASSEMBLED IN UNITED STATES

ILLUMINATION

- *Two fully adjustable, semi-recessed ultra bright, 7.0 watt, MR-16 halogen lamp heads standard.*
- *High performance MR16 halogen lamps with smooth metallized reflector and glass lens for optimal light distribution.*

ELECTRICAL

- *Dual 120/277 voltage.*
- *Charge rate/power "ON" LED indicator light and push-to-test switch for mandated code compliance testing.*
- *LVD (low voltage disconnect) prevents battery from deep discharge.*
- *6V maintenance-free, rechargeable sealed lead acid battery.*
- *Internal solid-state transfer switch automatically connects the internal battery to lamp heads for minimum 90-minute emergency illumination.*
- *Fully automatic solid-state, two rate charger initiates battery charging to recharge a discharged battery in 24 hours.*

MOUNTING

Universal knockout pattern on back plate for wall mount. Snaps into place making internal electrical connections.

- *Knockout for conduit applications.*

HOUSING

- *Injection-molded, engineering grade, 5VA flame retardant, high-impact resistant, thermoplastic in white or black finish.*

OPTIONS

- *LED: 3.3W high performance MR-16 base LED lamps for increased center-to-center spacing.*
- *USA: Substantial transformation assembly in the U.S. complies with "Assembled in the USA" under the Buy American Act.*
- *PLED: 5.0W high performance MR-16 base LED lamps for premium center-to-center spacing*

WARRANTY / LISTING

- *Five year warranty on all electronics and housing. Battery prorated for two years.*
- *Meets UL924, NFPA 101 Life Safety Code, NEC, OSHA, Local and State Codes.*
- *UL Listed for damp locations (20°C – 40°C).*

DIMENSIONS

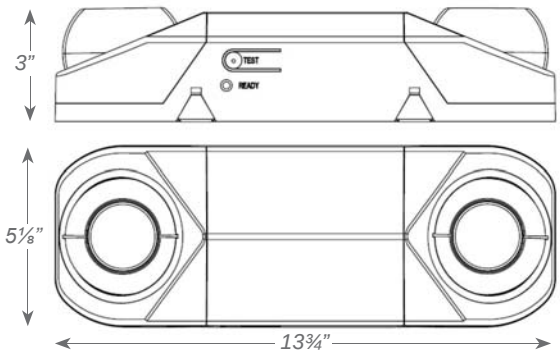

ORDERING INFORMATION

Sample Part Number: **EM22-16**

Special voltage options available.
Check with your local Representative.

MODEL	HOUSING COLOR		OPTIONS	
EM22-16	(blank)	White	LED	3.3W High Lumen White LED Lamps
	B	Black	USA	Assembled In USA
			PLED	5.0W High Lumen White LED Lamps