Advantage Environmental Lighting

EM15

Remote Capable Incandescent Emergency Unit

STANDARD	OPTIONAL
UL LISTED, DAMP LOCATION	SDT, ASSEMBLED IN USA

ILLUMINATION

- *Two fully-adjustable 5.4 watt, glare-free lamp heads.*
- *Smooth plastic reflector and lens for optimal light distribution.*

ELECTRICAL

- *Dual 120/277 voltage.*
- *Offers "11W" of remote capacity.*
- *Charge rate/power "ON" LED indicator light and push-to-test switch for mandated code compliance testing.*
- *LVD (low voltage disconnect) prevents battery from deep discharge.*
- *6V maintenance-free, rechargeable Sealed lead acid battery.*
- *Internal solid-state transfer switch automatically connects the internal battery to lamp heads for minimum 90-minute emergency illumination.*
- *Fully automatic solid-state, two-rate charger initiates battery charging to recharge a discharged battery in 24 hours.*

MOUNTING

- *Surface mount via easy connect back plate, which fits most standard junction boxes and snaps into place making internal electrical connections.*
- *Top and back K/O for conduit applications.*
- *Suitable for wall or ceiling mount.*

HOUSING

- *Injection-molded, engineering-grade, 5VA flame retardant, high-impact resistant, thermoplastic in white or black finish.*

OPTIONS

- *SDT: Self-diagnostic test feature performs monthly, biannually, and annually tests to ensure reliable operation and to meet electrical and life safety codes.*
- *USA: Substantial transformation assembly in the U.S. complies with "AssembLED in the USA" under the Buy American Act.*

WARRANTY/LISTING

- *Five year warranty on all electronics and housing. Battery pro-rated for two years.*
- *Meets UL924, NFPA 101 Life Safety Code, NEC, OSHA, Local and State Codes.*
- *UL listed for damp locations. (20°C – 40°C)*

DIMENSIONS

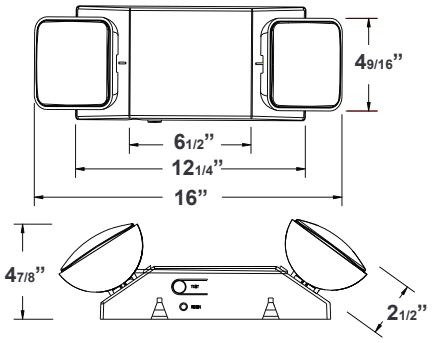

ORDERING INFORMATION

Sample Part Number: ***EM15***

Special voltage options available.
Check with your AEL Representative.

Model	Housing Color		Options	
EM15	Blank	White	SDT	Self Diagnostics
	B	Black	USA	Assembled in the USA

T (817) 468-3591 E info@aelnow.com www.aelnow.com

Specifications subject to change without notice.

Advantage Environmental Lighting

EM15

Remote Capable Incandescent Emergency Unit

ELECTRICAL INFORMATION

Catalog Number	Input Watts (W)		Input Amps (A)	
	120V	277V	120V	277V
EM15	4.1	4.6	0.037	0.018
EM15-SDT	5.2	5.2	0.06	0.03

CENTER-TO-CENTER SPACING GUIDELINES

Consult factory for details.

MAY 23, 2018