ADVANTAGE ENVIRONMENTAL LIGHTING

MADE IN THE USA

CATALOG #:

PROJECT:

TYPE:

# EM11R-16 EMERGENCY UNIT

**ILLUMINATION:**

- Two fully adjustable, 5W, MR-16 halogen lamp heads standard.
- Optional 3.3W white LED lamp heads.

**ELECTRICAL:**

- Dual 120/277 voltage.
- Charge rate/power "ON" LED indicator light and push-to-test switch for mandated code compliance testing.
- LVD (low voltage disconnect) prevents battery from deep discharge.
- 6V maintenance-free, rechargeable sealed lead acid battery.
- Internal solid-state transfer switch automatically connects the internal battery to lamp heads for minimum 90-minute emergency illumination.
- Fully automatic solid-state, two rate charger initiates battery charging to recharge a discharged battery in 24 hours.

**MOUNTING:**

- Universal knockout pattern on back plate for wall mount. Snaps into place making internal electrical connections.
- Knockout for conduit applications.

**OPTIONS:**

- **SDT:** Self-diagnostic feature performs monthly, biannual, and annual tests to ensure reliable operation and meets electrical and life safety codes.
- **HTR:** Optional internal heater for cold temperature
- (-9°C – 50°C) applications.
- **USA:** Substantial transformation assembly in the U.S. complies with "Assembled in the USA" under the Buy American Act.
- **LED:** 3.3W high performance MR-16 base LED lamps for increased center-to-center spacing.
- **PLED:** 5.0W high performance MR-16 base LED lamps for premium center-to-center spacing

**WARRANTY/LISTING:**

- Five year warranty on all electronics and housing. Battery pro-rated for two years.
- Meets UL924, NFPA 101 Life Safety Code, NEC, OSHA, Local and State Codes.
- UL Listed for damp locations (20°C – 40°C).

**ORDERING INFORMATION** **Example:** EMR11R16-B-SDT

| SERIES | HOUSING COLOR | | ILLUMINATION | |
|---|---|---|---|---|
| EMR11R16 | Blank | White | SDT | Self-Diagnostics |
| | B | Black | HTR | Internal Heater |
| | | | USA | Assembled In USA |
| | | | LED | 3.3W High Lumen White LED Lamps[1] |
| | | | PLED | 1 5.0W High Lumen White LED Lamps[1] |

*Special voltage options available.Check with your Representative.*

## DIMENSIONS

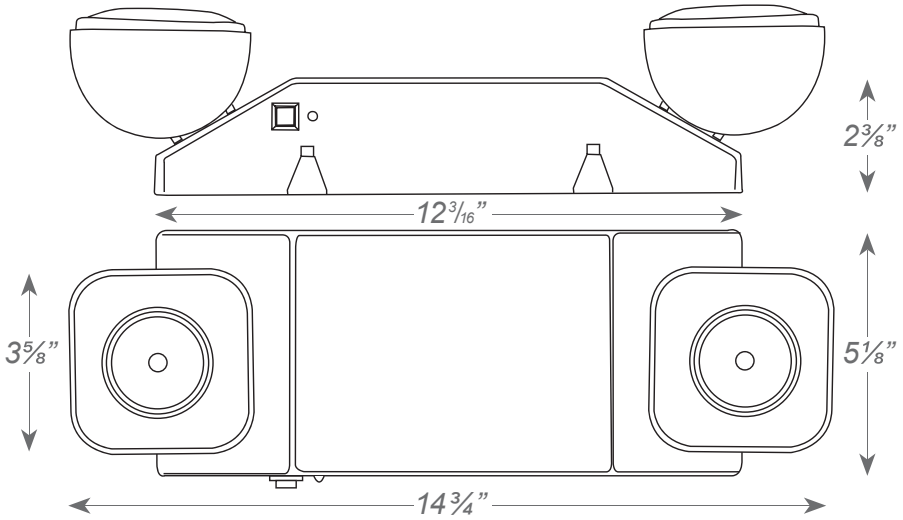


## ELECTRICAL INFORMATION

| CATALOG NUMBER | INPUT WATTS (W) | | INPUT AMPS (A) | |
|---|---|---|---|---|
| | 120V | 277V | 120V | 277V |
| EM11R-16 | 3.5 | 4.9 | 0.031 | 0.019 |
| EM11R-16-SDT | 4.5 | 4.5 | 0.040 | 0.030 |