Advantage Environmental Lighting

EM10BAA

BAA Compliant Incandescent Thermoplastic Emergency Unit

STANDARD	OPTIONAL
c UL us LISTED, DAMP	SELF DIAGNOSTIC, INTERNAL HEATER

BUY AMERICAN ACT BAA COMPLIANT

ILLUMINATION

- *Two fully adjustable 5.4 watt glare-free lamp heads.*
- *Smooth thermoplastic reflector and plastic lens for optimal light distribution.*

ELECTRICAL

- *Dual 120/277 voltage.*
- *Charge rate/power "ON" LED indicator light and push-to-test switch for mandated code compliance testing.*
- *LVD (low voltage disconnect) prevents battery from deep discharge.*
- *6V maintenance-free, rechargeable sealed lead acid battery.*
- *Internal solid-state transfer switch automatically connects the internal battery to lamp heads for minimum 90-minute emergency illumination.*
- *Fully automatic solid-state, two rate charger initiates battery charging to recharge a discharged battery in 24 hours.*

MOUNTING

- *Universal knockout pattern on back plate for wall mount. Snaps into place making internal electrical connections.*
- *Knockout for conduit applications.*

HOUSING

- *Injection-molded, engineering grade, 5VA flame retardant, high-impact resistant, thermoplastic in white or black finish.*

OPTIONS

- *SDT: Self-diagnostic feature performs monthly, biannual, and annual tests to ensure reliable operation and meets electrical and life safety codes.*
- *HTR: Optional internal heater for cold temperature (-9°C – 50°C) applications.*

WARRANTY / LISTING

- *Five year warranty on all electronics and housing. Batteries prorated for two years.*
- *Meets UL924, NFPA 101 Life Safety Code, NEC, OSHA, Local and State Codes.*
- *Meets CSA C22.2 No. 141-02 Requirements for unit equipment.*
- *UL listed for damp locations (20°C – 50°C).*

DIMENSIONS

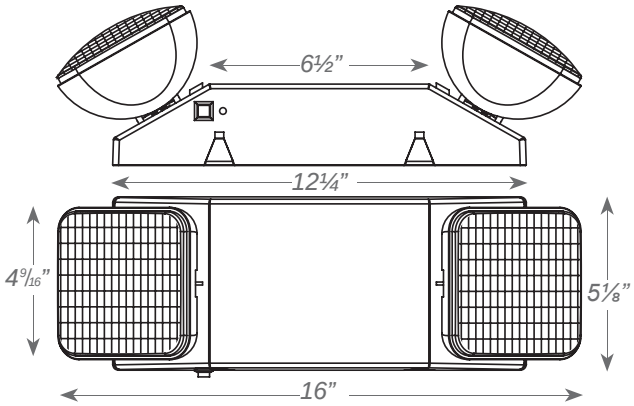

ORDERING INFORMATION

Sample Part Number: **EM10BAA**

MODEL	HOUSING COLOR		OPTIONS	
EM10BAA	*(blank)*	*White*	*SDT*	*Self-Diagnostics*
Best # RI	*BLK*	*Black*	*HTR*	*Internal Heater*